Circuiti integrati

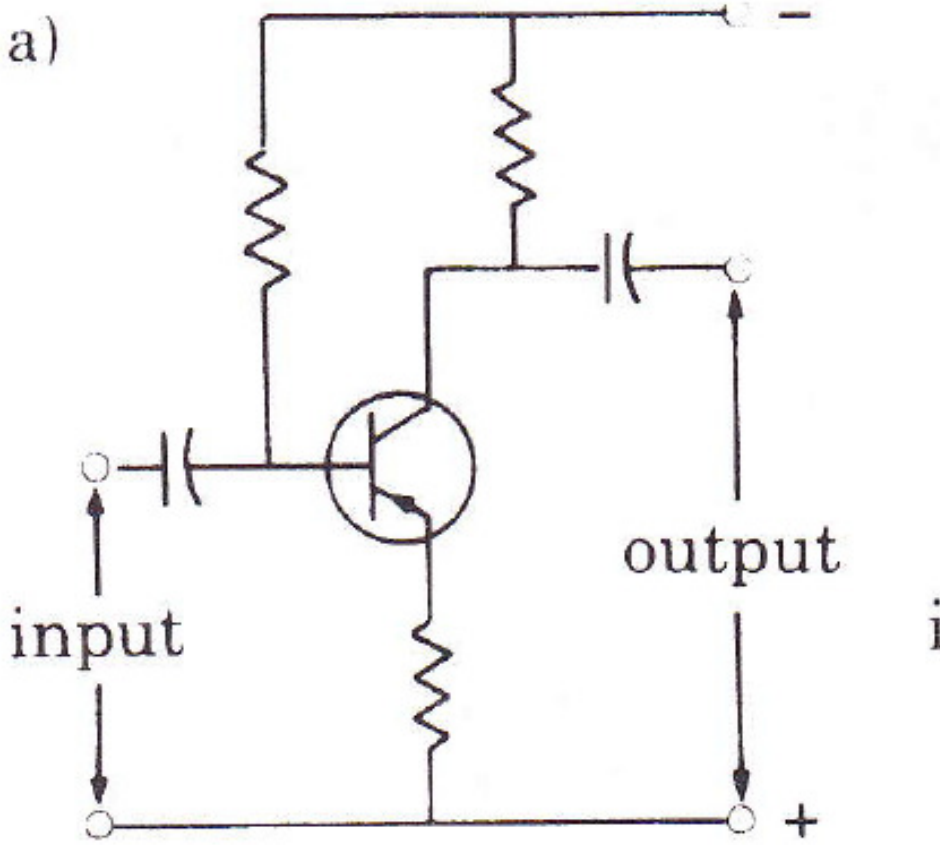

Circuiti integrati

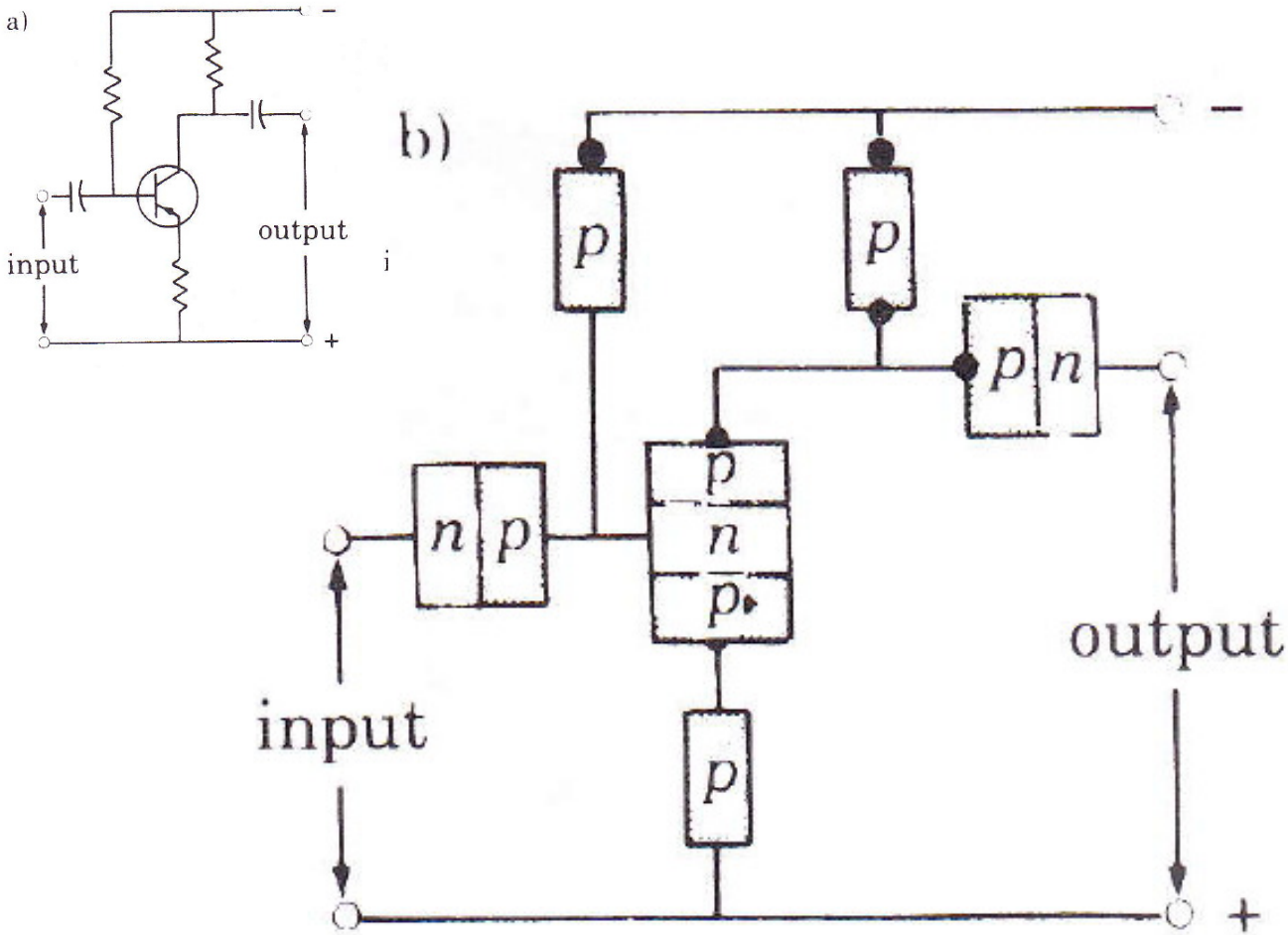

Circuiti integrati

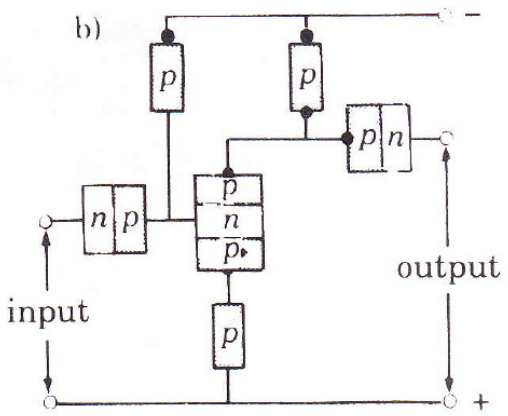

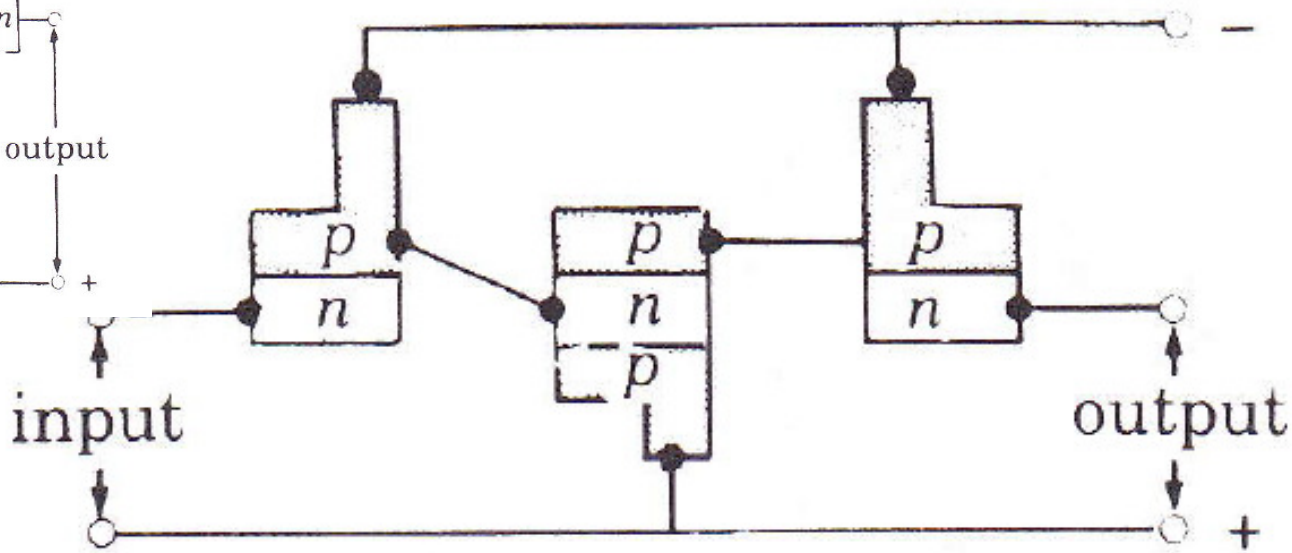

Circuiti integrati

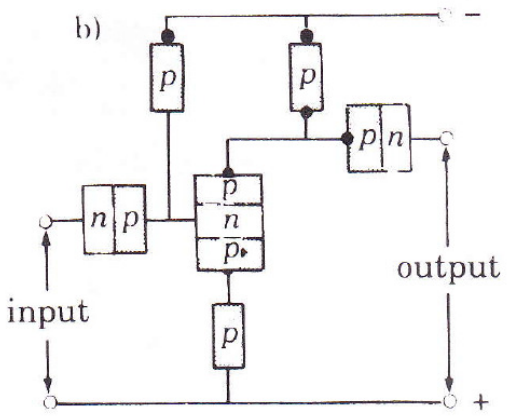

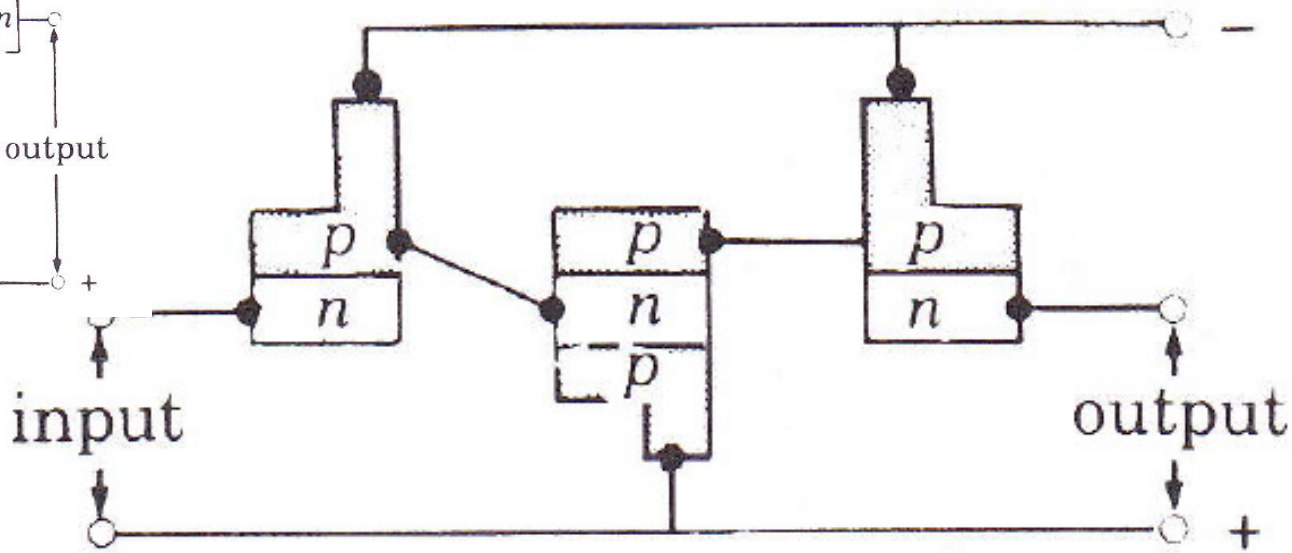

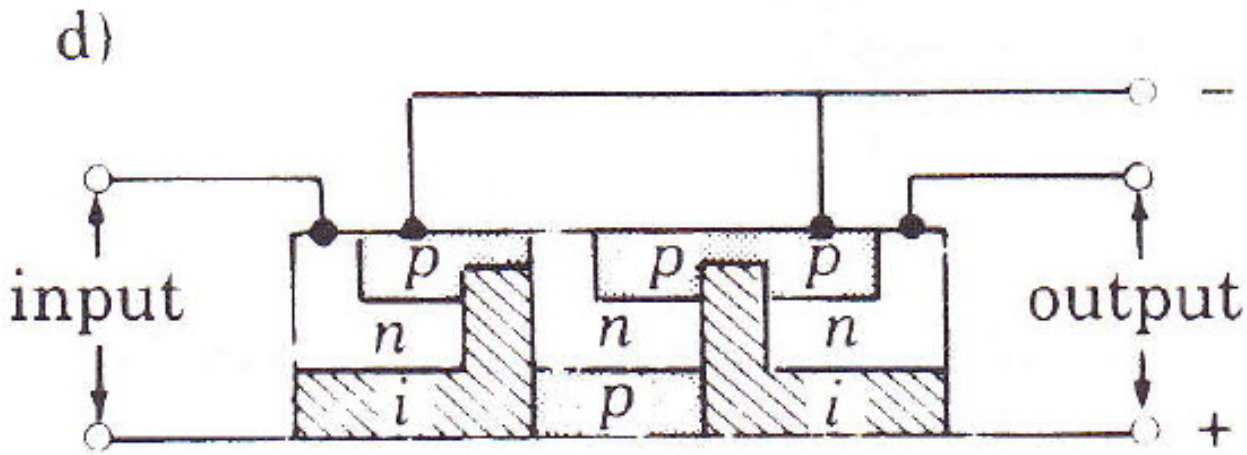

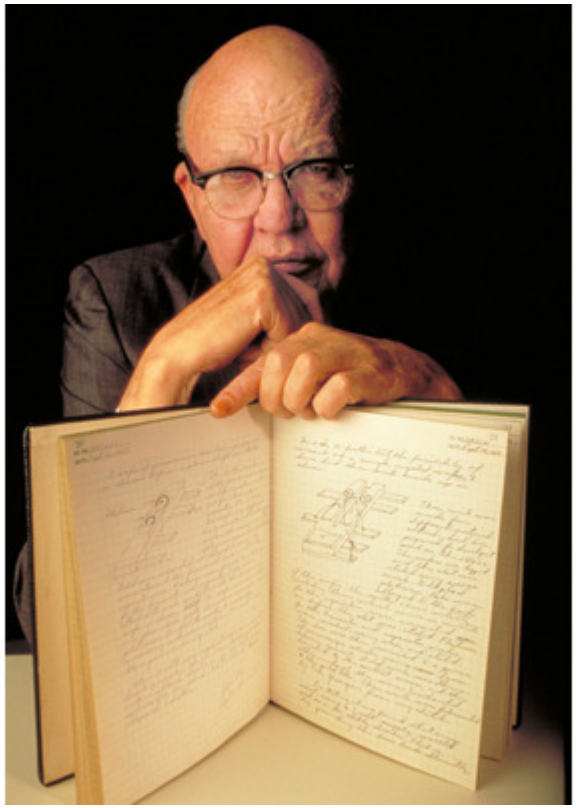

Jack Kilby with his lab notebook open at his first solid circuit drawing

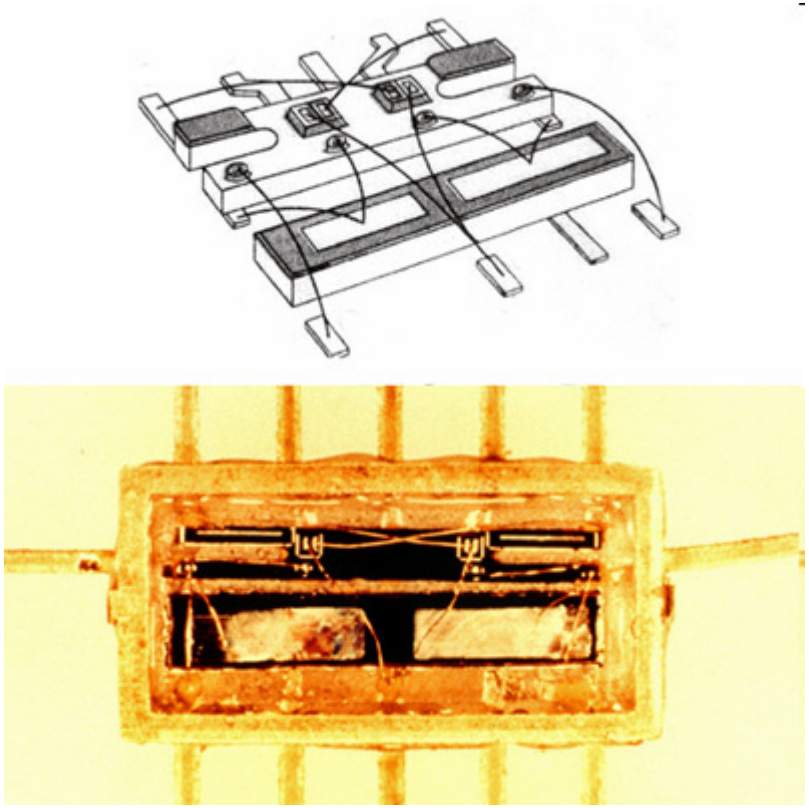

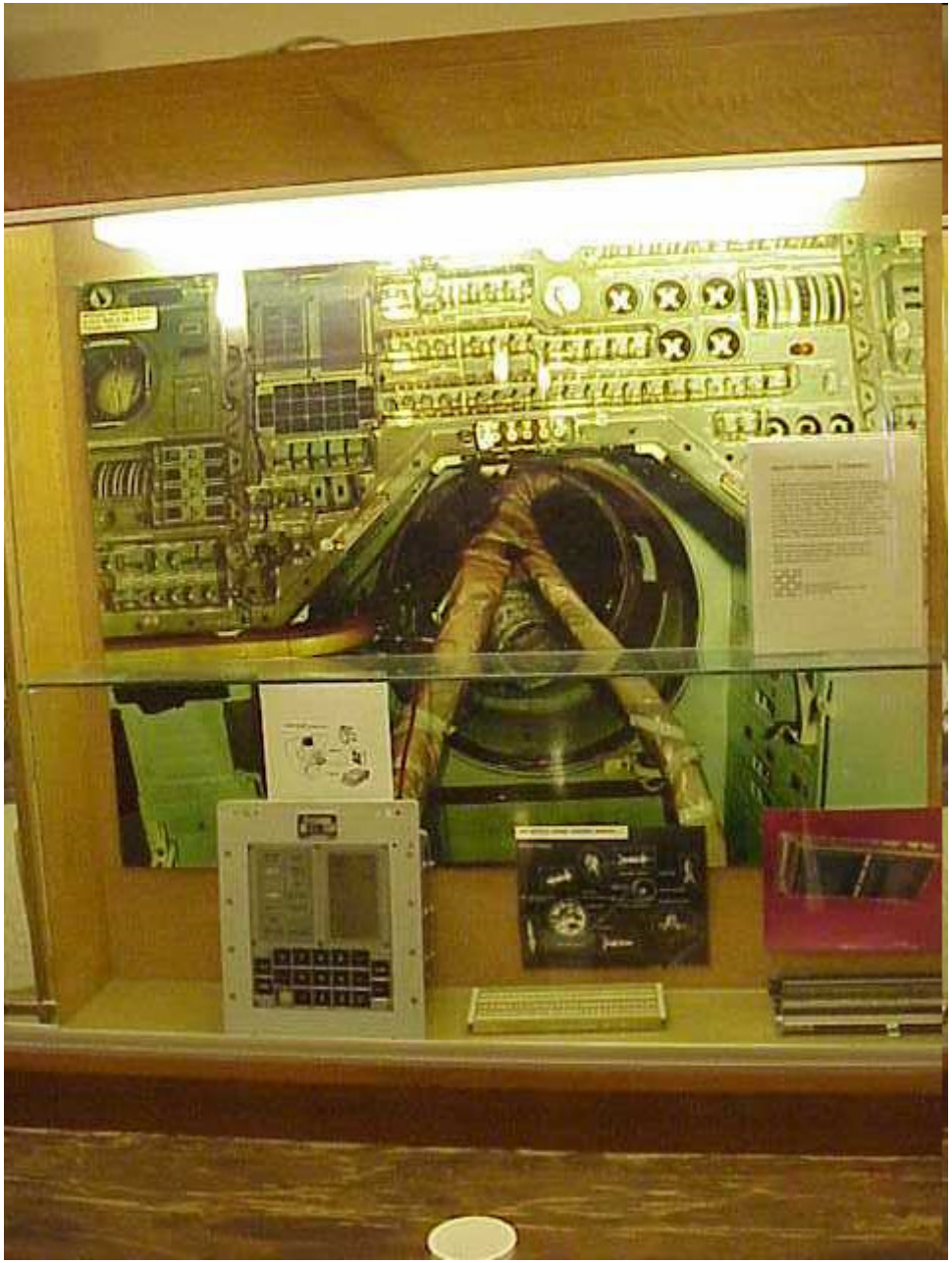

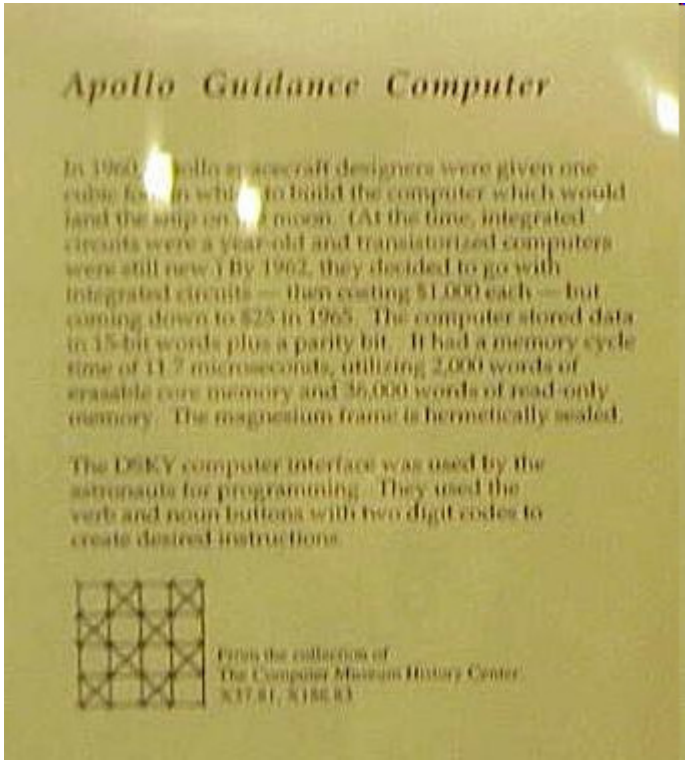

First IC Computer
2 Kbytes RAM
36 Kbytes ROM

Circuiti integrati

Small-Scale Integration (**SSI**), <100 transistors 1960-1965

Medium-Scale Integration (**MSI**).100-3000 transistors 1965-1975

Large-Scale Integration (**LSI**) 3000-100000 transistors 1975- 1980

Very -LSI (**VLSI**) 100000-1000000 1980-2000

Ultra -LSI (**ULSI**) more than 1 million transistors.

Wafer Scale Integration (**WSI**) entire silicon wafer for a single "super-chip".

Three Dimensional IC (3D-IC) has two or more layers of active electronic components that are integrated both vertically and horizontally into a single circuit.

ULSI

VLSI

LSI

MSI

SSI

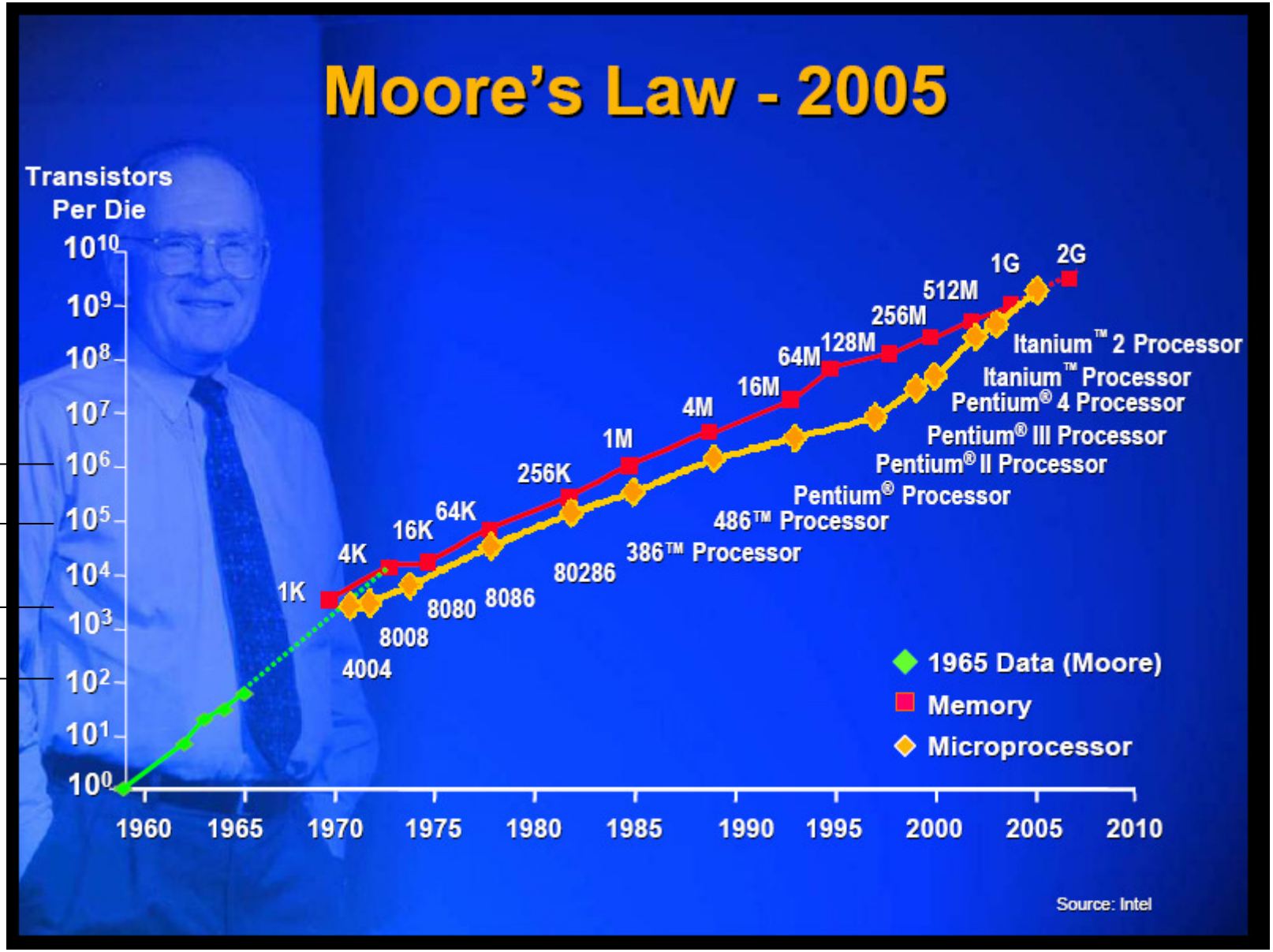

The microelectronics success story

A cost reduction unique in the industry history

PRIZE EVOLUTION OF 1 Million transistors

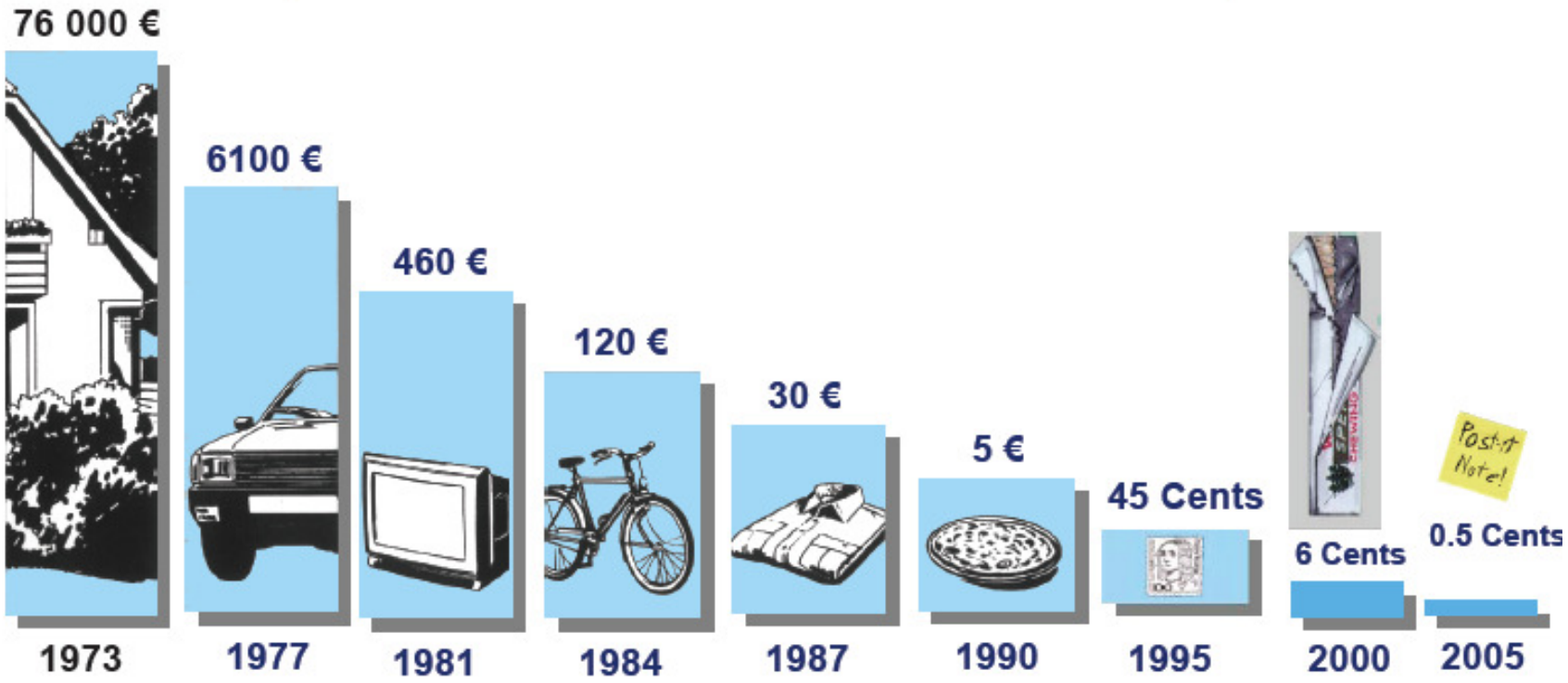

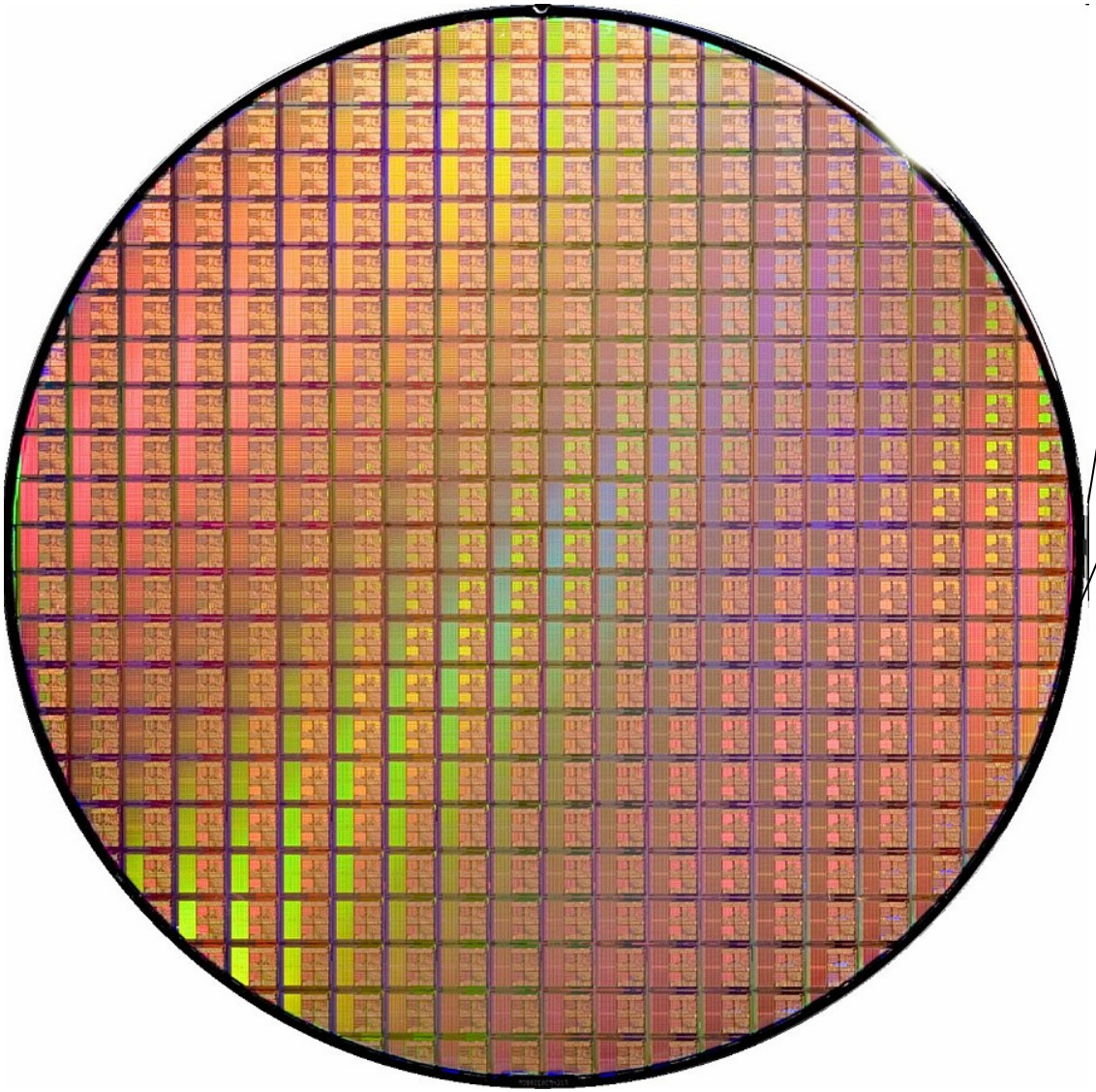

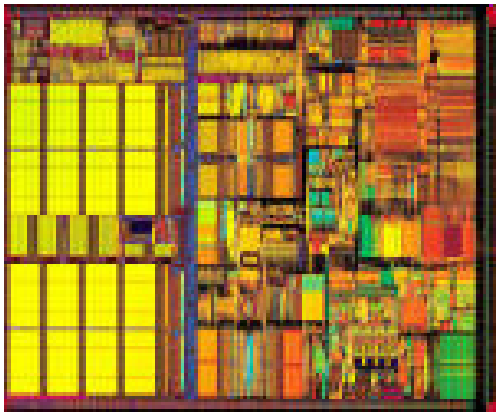

Pentium 3
9.5 MTransistors

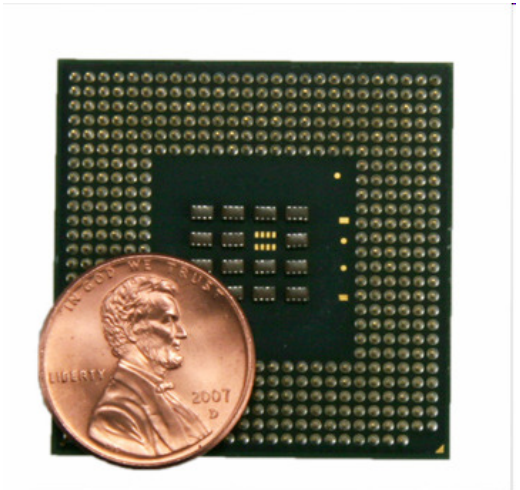

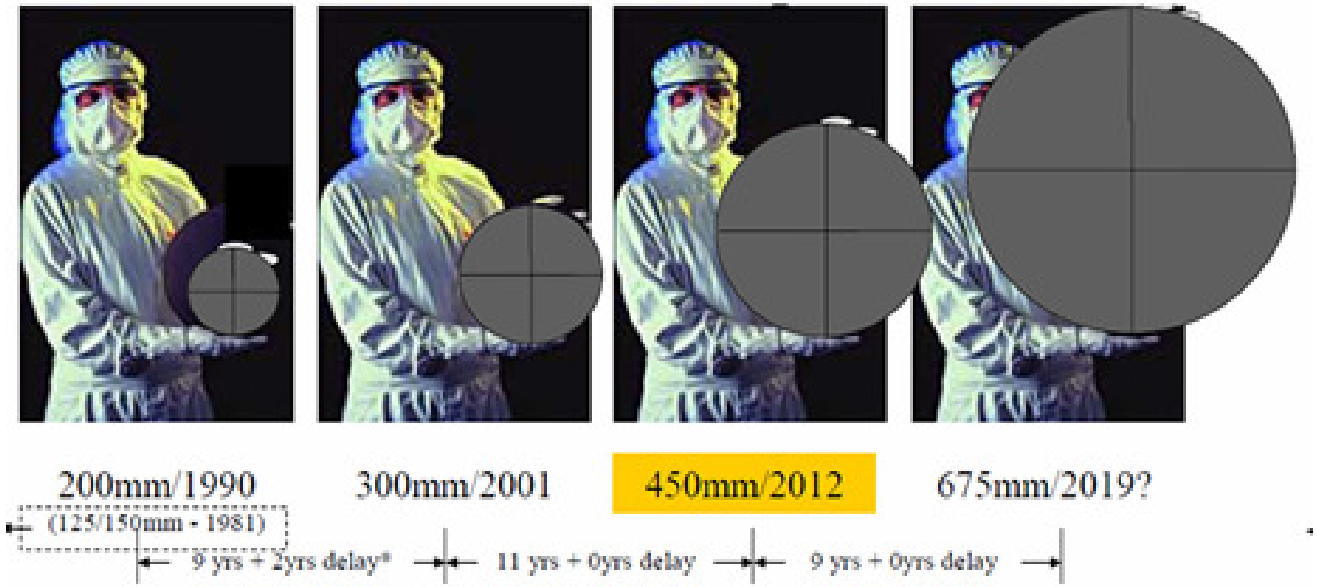
200mm/1990
300mm/2001
450mm/2012
675mm/2019?
(125/150mm - 1981)
9 yrs + 2yrs delay*
11 yrs + 0yrs delay
9 yrs + 0yrs delay

Costruzione di 1 MOSFET

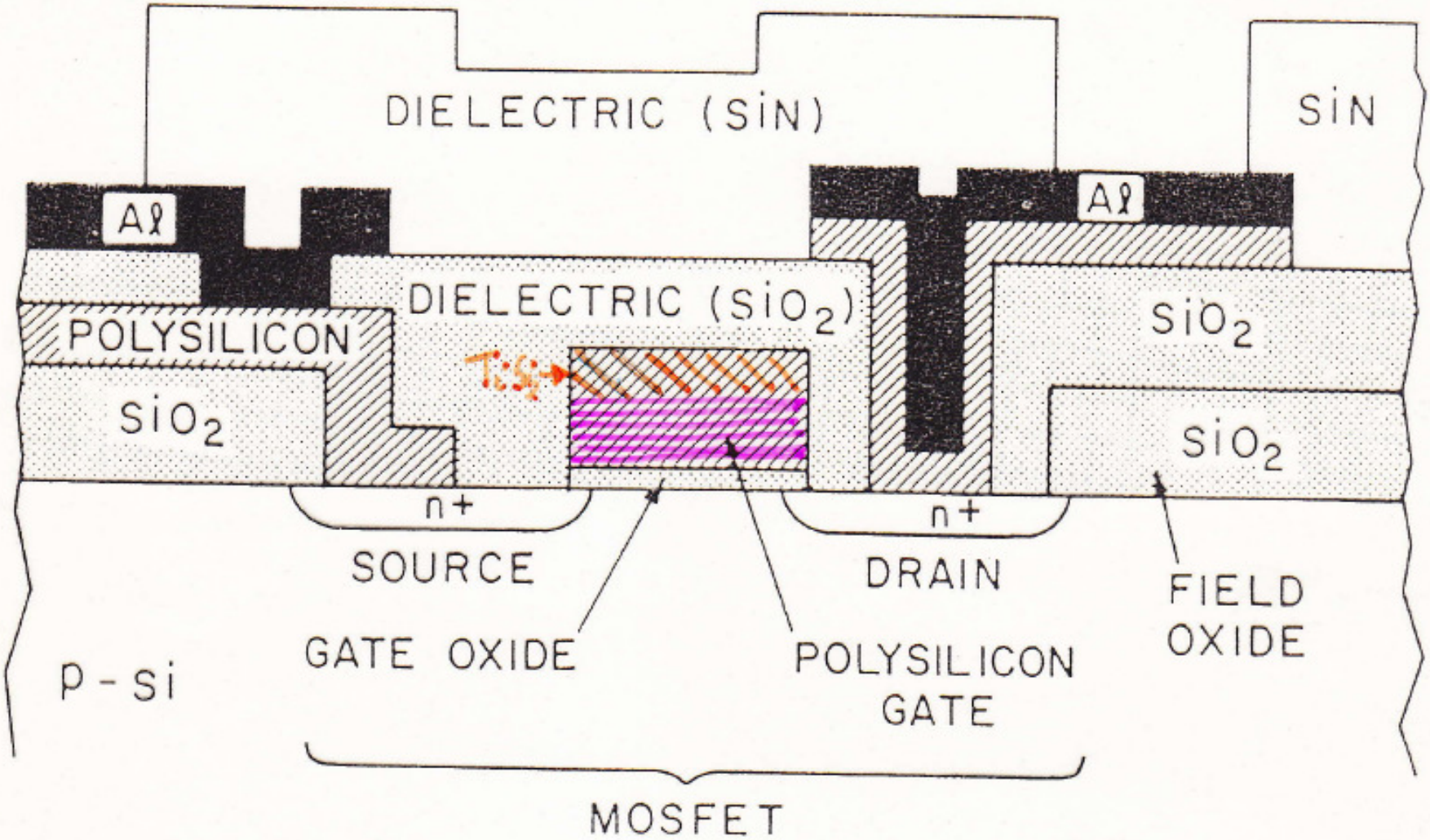

Fig. 1 Schematic view of a MOSFET cross section.

Crescita ossido termico (Gate oxide)

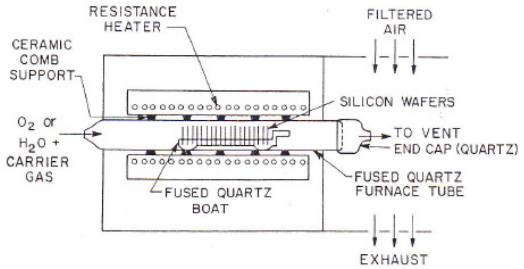

Fig. 2 Schematic cross section of a resistance-heated oxidation furnace. The silicon wafer loading area is shown in a laminar hood.[3]

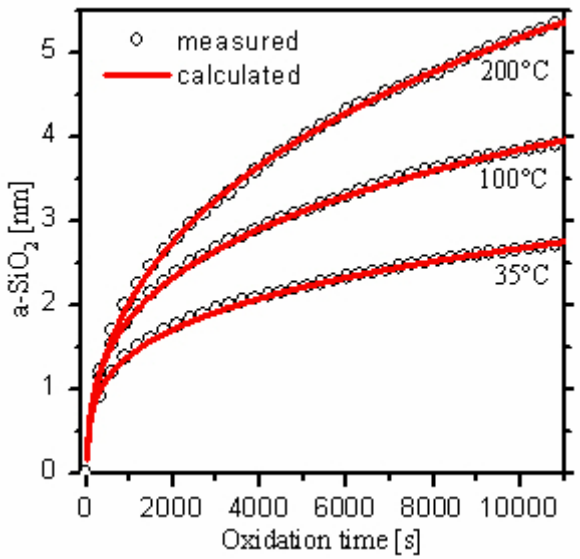

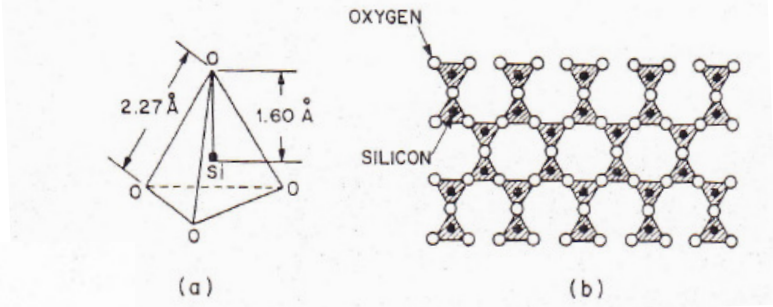

Problem

If a silicon oxide layer of thickness x is grown from thermal oxidation, what is the thickness of silicon being consumed?

Solution

The volume of 1 mole silicon is

$$\frac{\text{Molecular weight of Si}}{\text{Density of Si}} = \frac{28.09 \text{ g/mole}}{2.33 \text{ g/cm}^3} = 12.06 \text{ cm}^3/\text{mole}.$$

The volume of 1 mole silicon dioxide is

$$\frac{\text{Molecular weight of } SiO_2}{\text{Density of } SiO_2} = \frac{60.08 \text{ g/mole}}{2.21 \text{ g/cm}^3} = 27.18 \text{ cm}^3/\text{mole}.$$

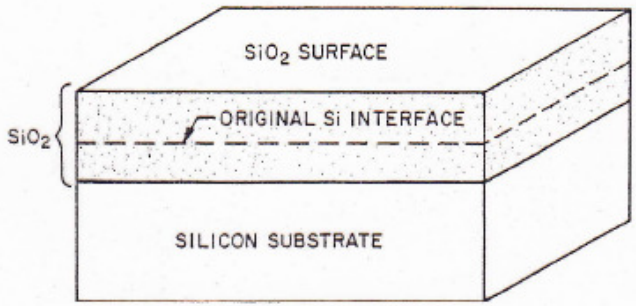

Fig. 3 Growth of silicon dioxide by thermal oxidation.[2]

Since 1 mole silicon is converted to 1 mole silicon dioxide,

$$\frac{\text{Thickness of Si} \times \text{area}}{\text{Thickness of } SiO_2 \times \text{area}} = \frac{\text{volume of 1 mole of Si}}{\text{volume of 1 mole of } SiO_2}$$

$$\frac{\text{Thickness of Si}}{\text{Thickness of } SiO_2} = \frac{12.06}{27.18} = 0.44$$

Thickness of silicon = 0.44(thickness of SiO_2).

That is, to grow 1000 Å of silicon dioxide, a layer of 440 Å of silicon is consumed.

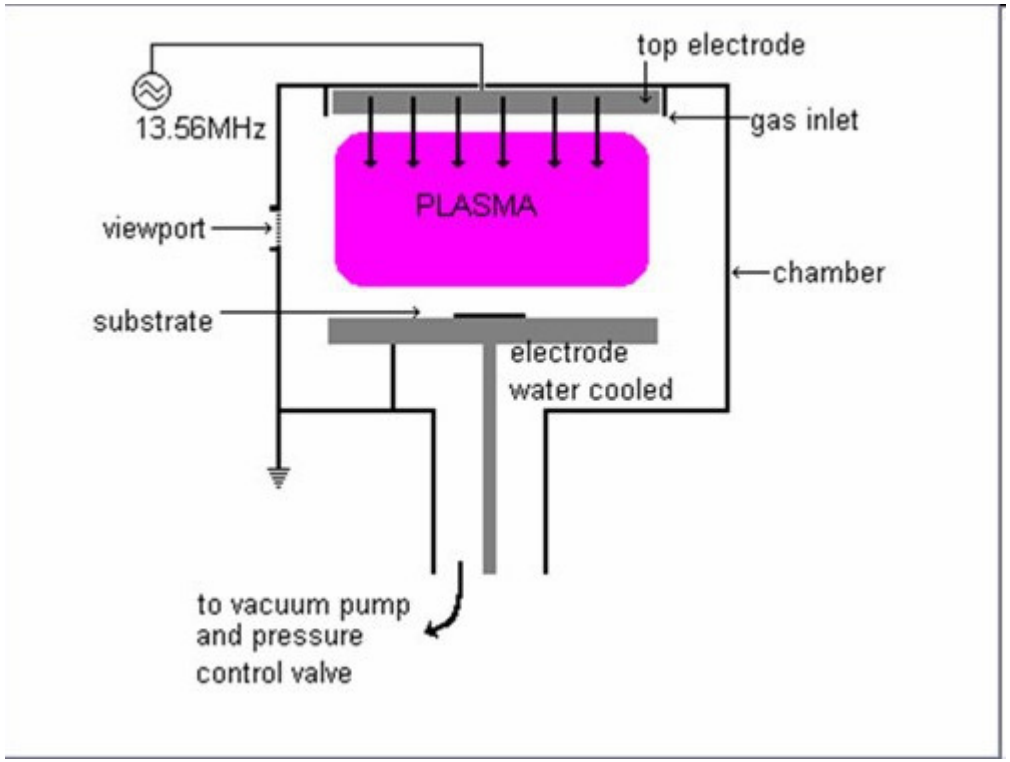
top electrode
13.56MHz
gas inlet
PLASMA
viewport
chamber
substrate
electrode
water cooled
to vacuum pump
and pressure
control valve

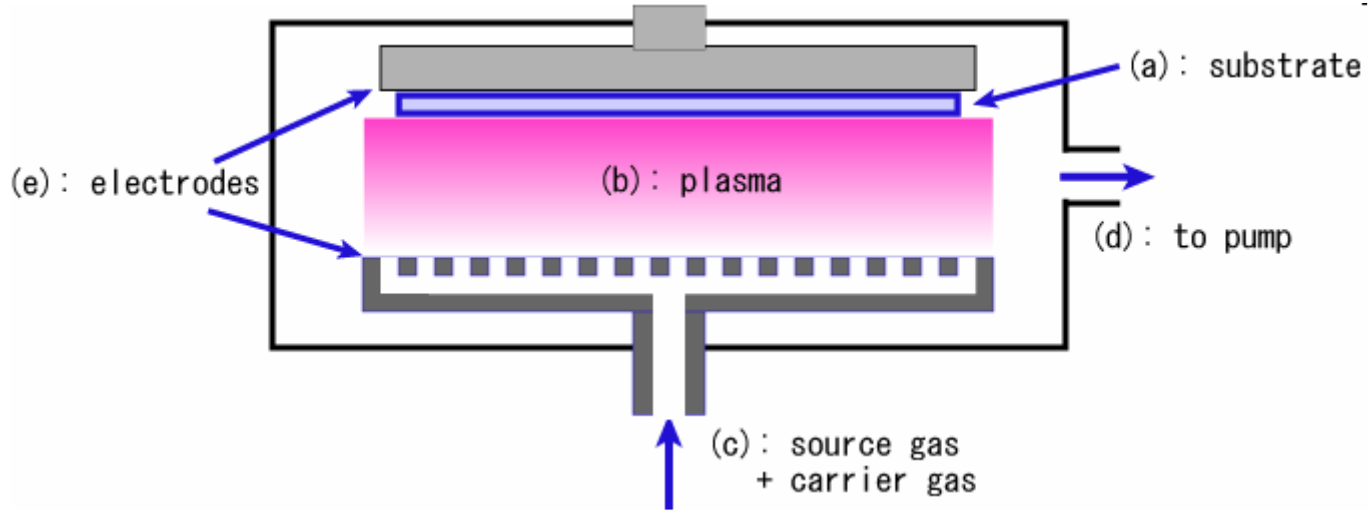
(a) : substrate
(e) : electrodes
(b) : plasma
(d) : to pump
(c) : source gas
+ carrier gas

PECVD

Deposito di SiO_2, Si_3N_4, polysilicon

Plasma enhanced chemical vapor deposition (**PECVD**)

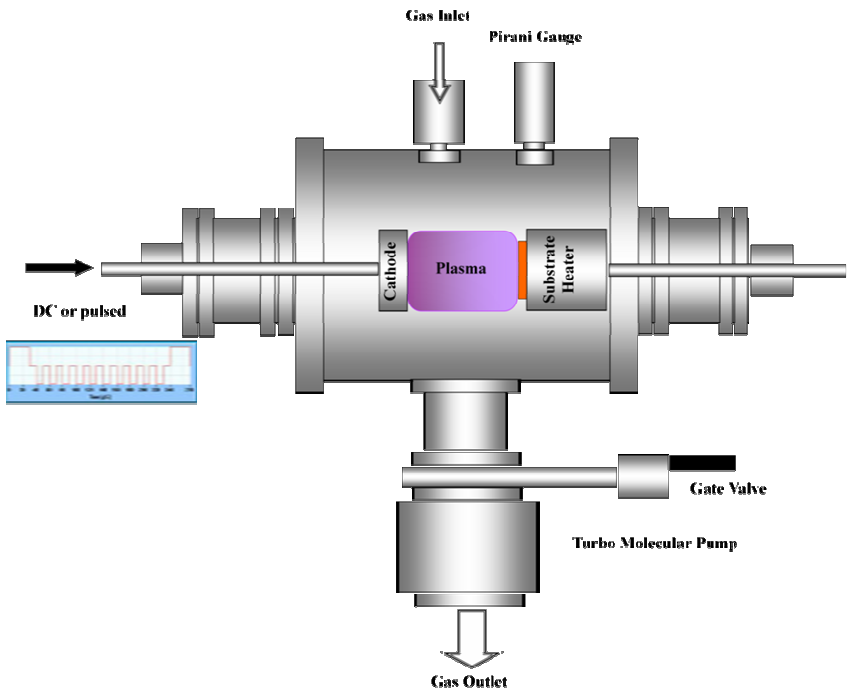

Schematic diagram of the pulsed-DC PECVD system

Vantaggi Plasma:

1) Formazione radicali
2) Bombardamento ionico che
3) Produce rimozione e planarizzazione.

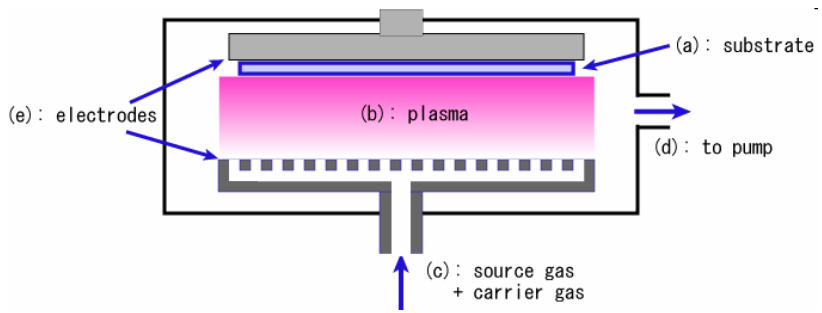

Deposito di metalli (sputtering)
Physical Vapor Deposition (PVD)

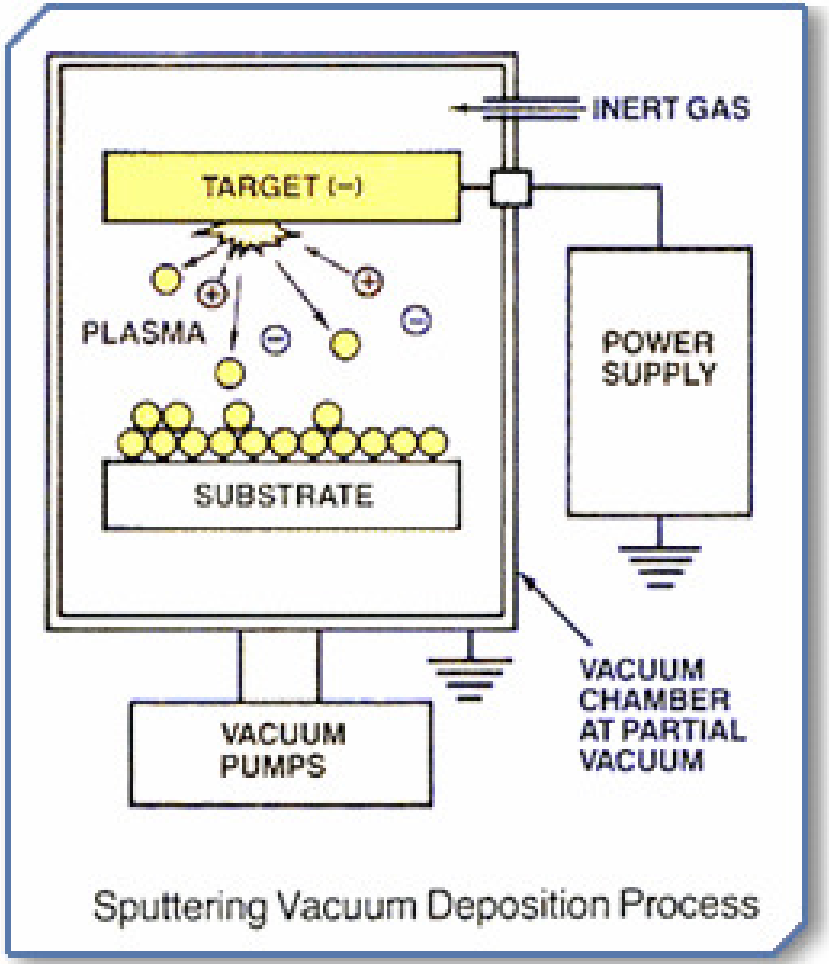

Physical Vapor Deposition (PVD)

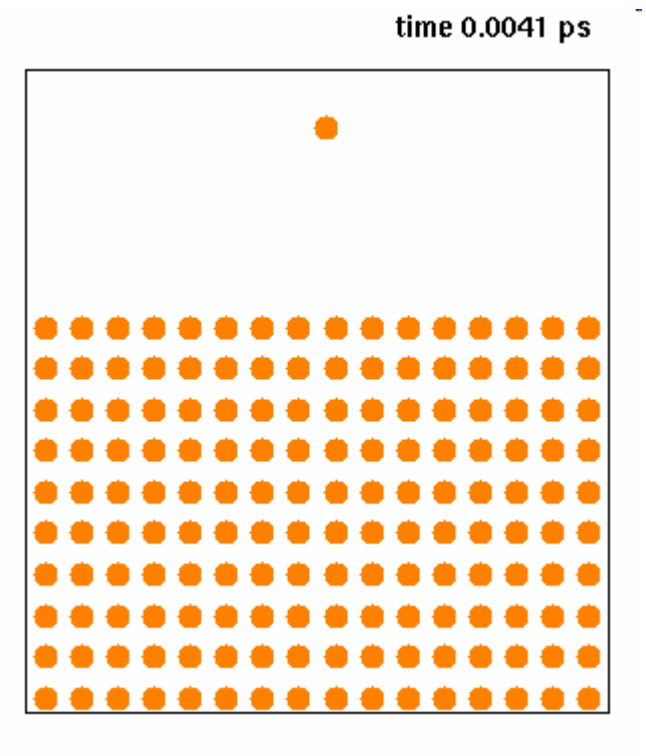

Physical Vapor Deposition (PVD)

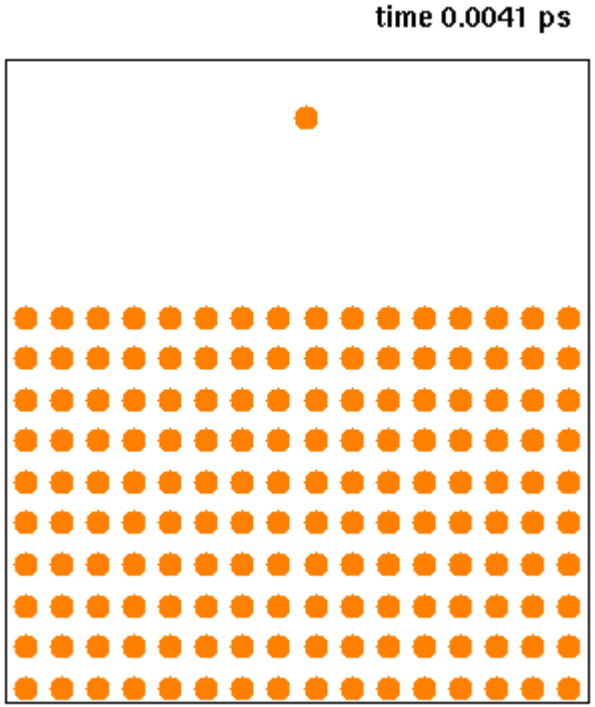

TiW-Ni-Au, Ti-NiV-Au, Ti-Pt-Au, Cr-Ni-Au and TiW-Ni-Ag

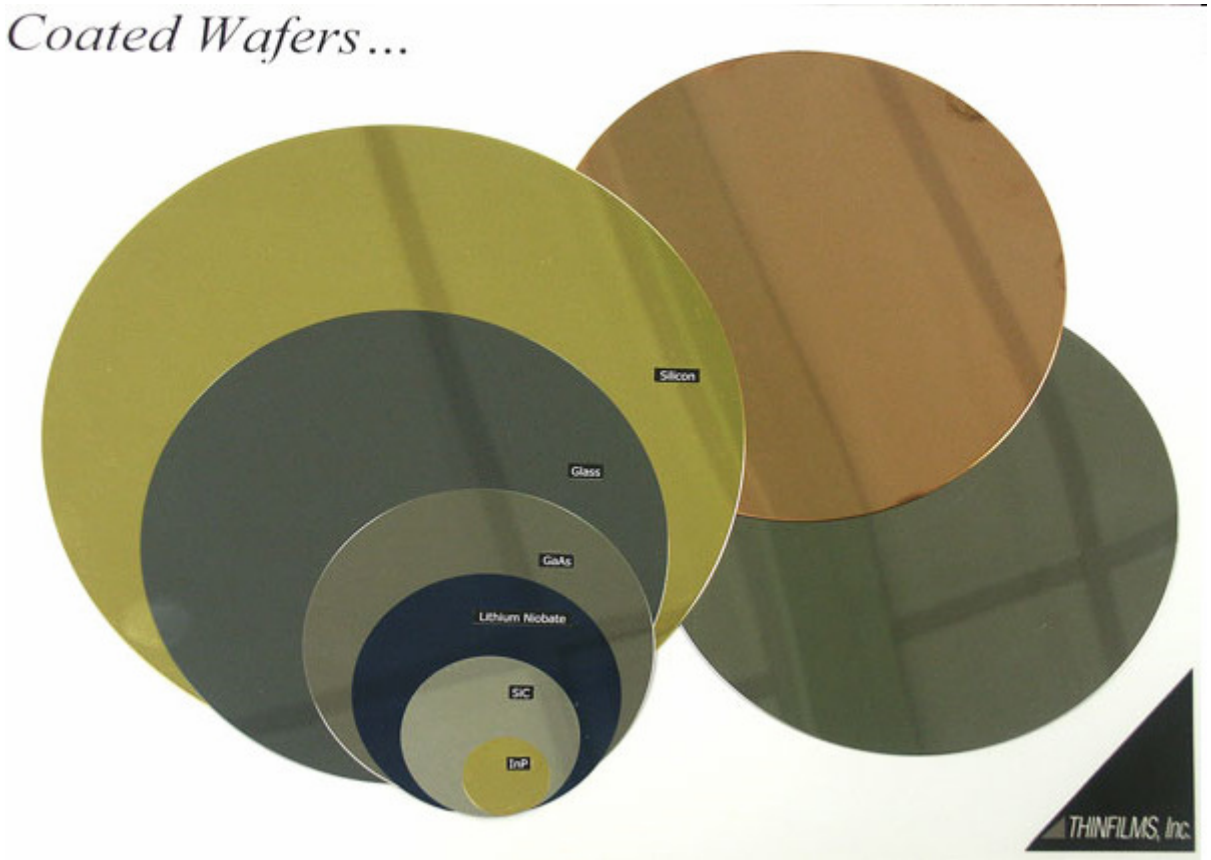

Drogaggio per diffusione

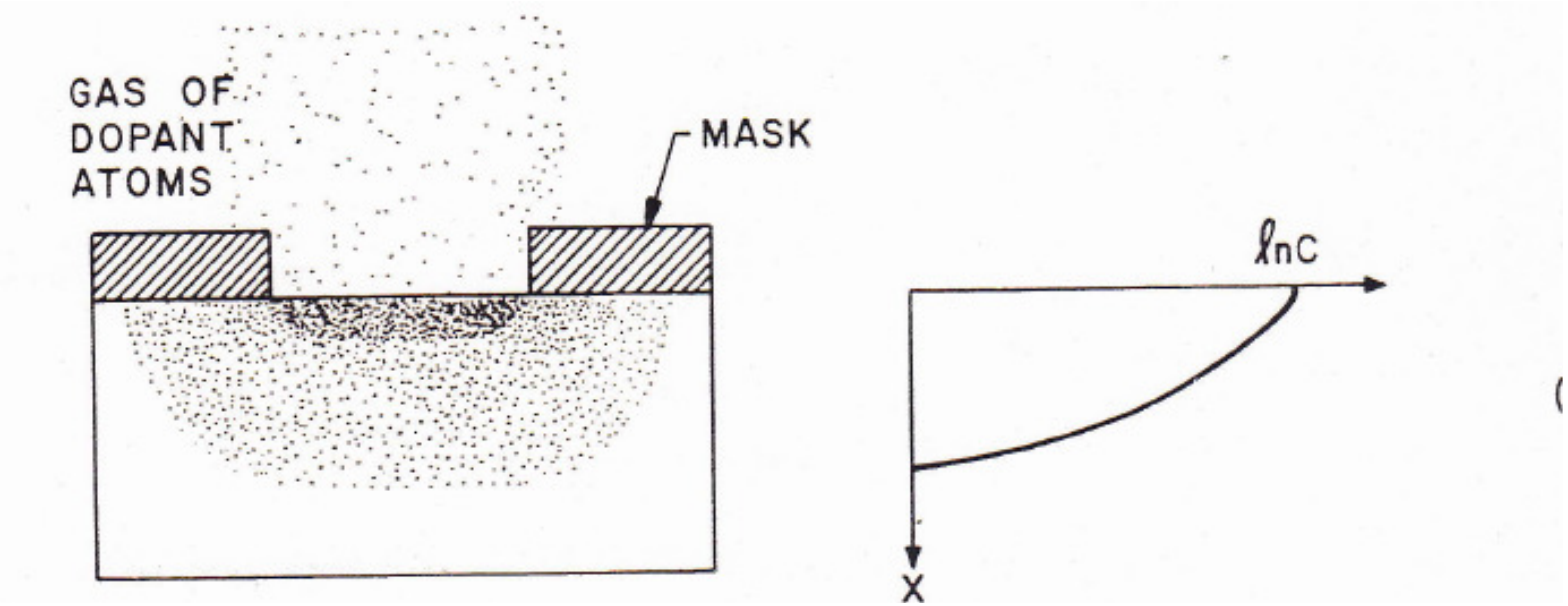

Drogaggio per diffusione

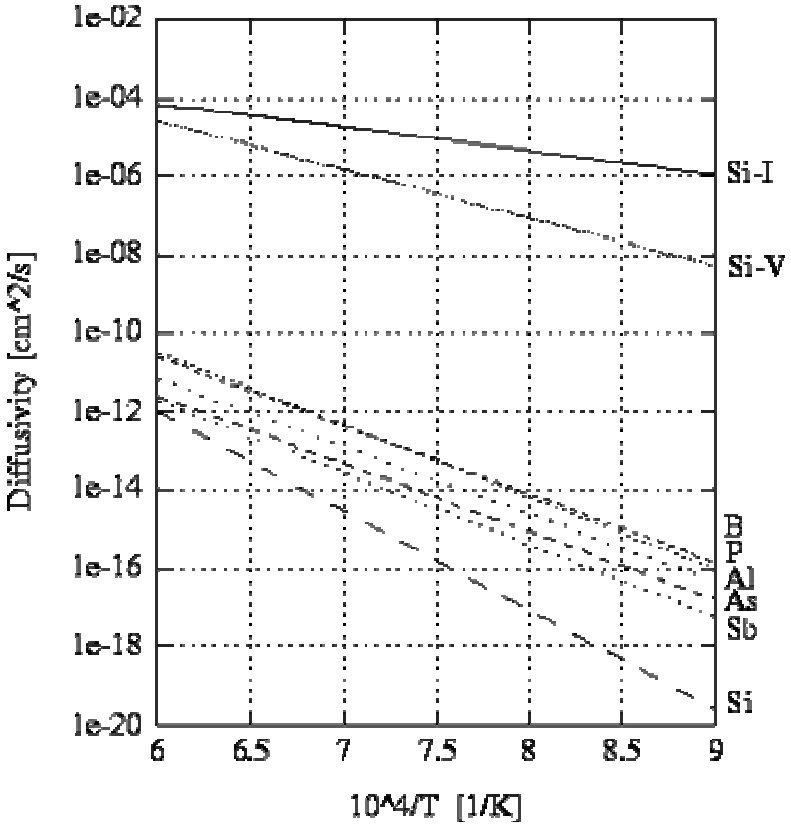

$$\vec{J} = -D_A^* \cdot \mathrm{grad}\, C_A$$

$$D_A^* = D_{AI} \cdot \left(\frac{C_{AI}}{C_A}\right) + D_{AV} \cdot \left(\frac{C_{AV}}{C_A}\right) = D_A^0 \cdot \exp\left(-\frac{E_A^0}{k \cdot T}\right)$$

Figure 3.1-4: Intrinsic diffusion coefficients for the most common diffusers in silicon.

Drogaggio per diffusione

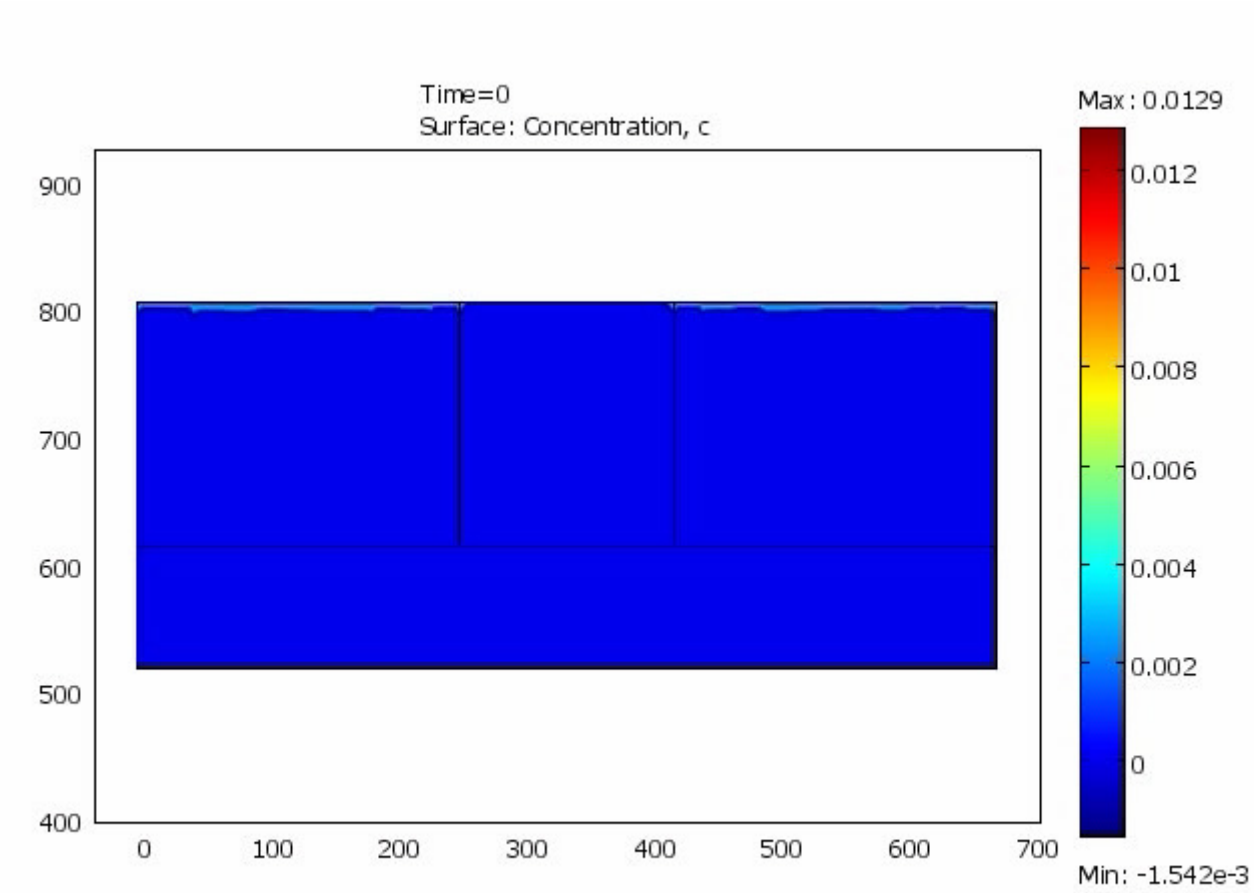

Drogaggio per impiantazione

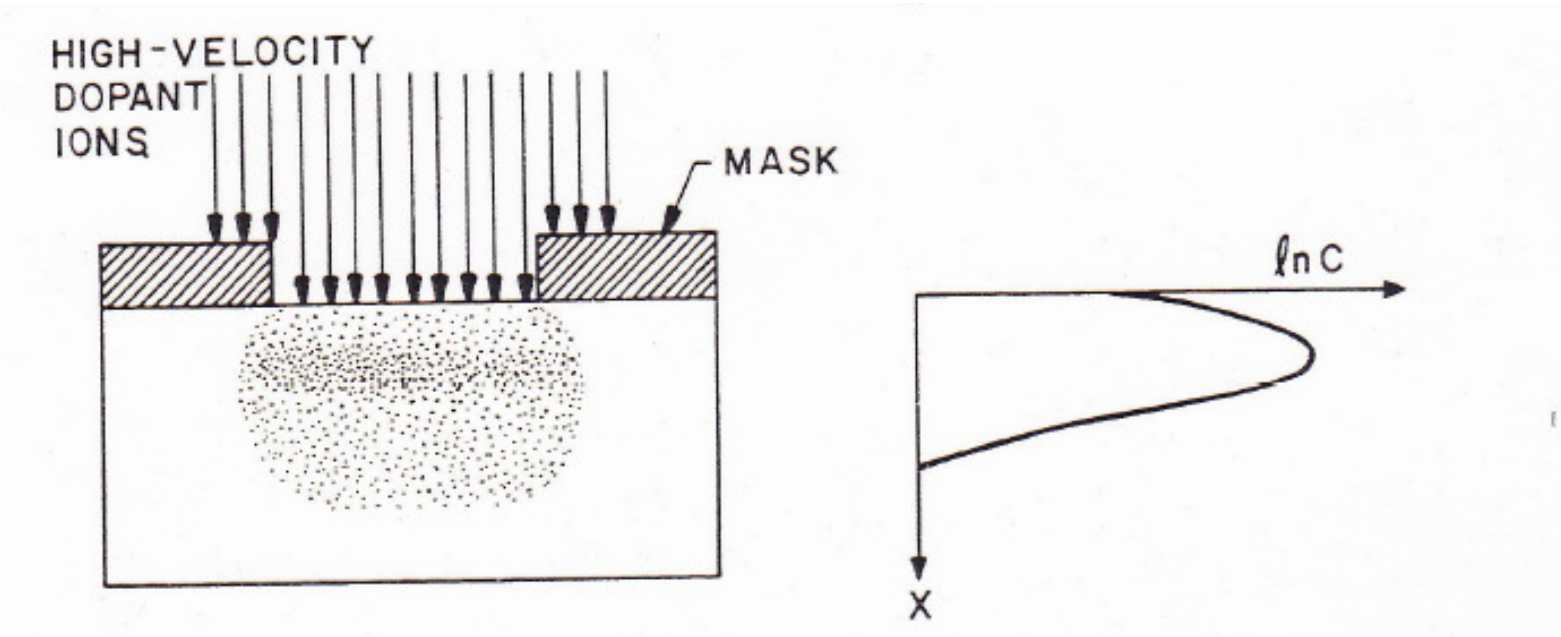

Drogaggio per impiantazione

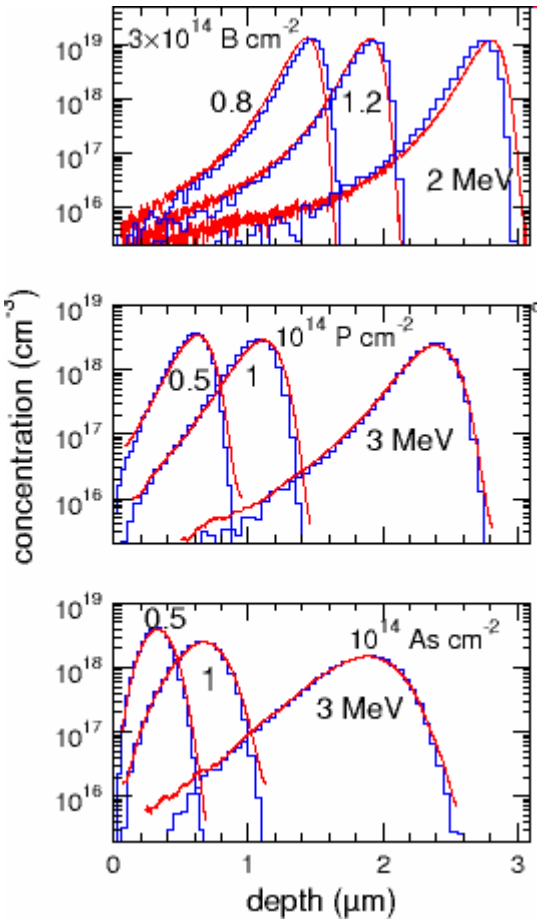

Drogaggio per impiantazione Channeling

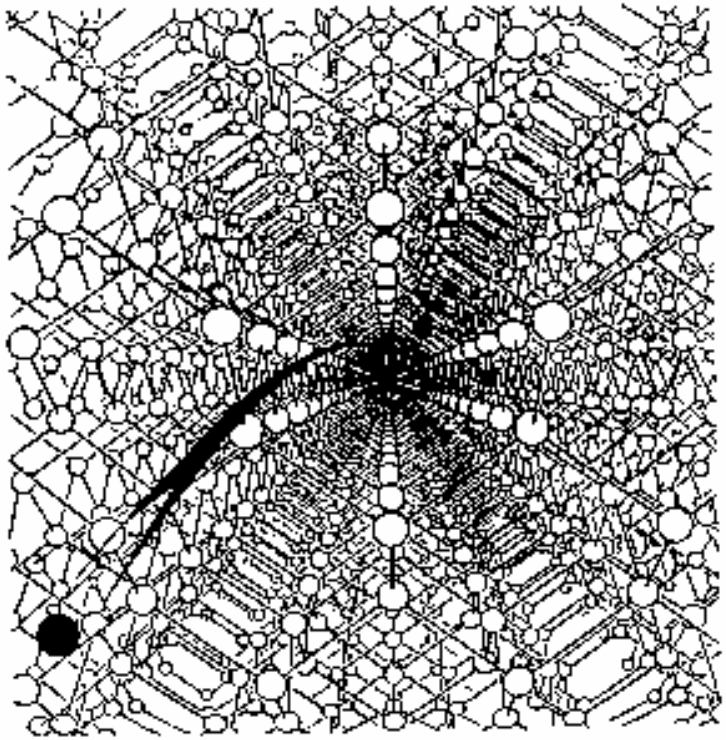

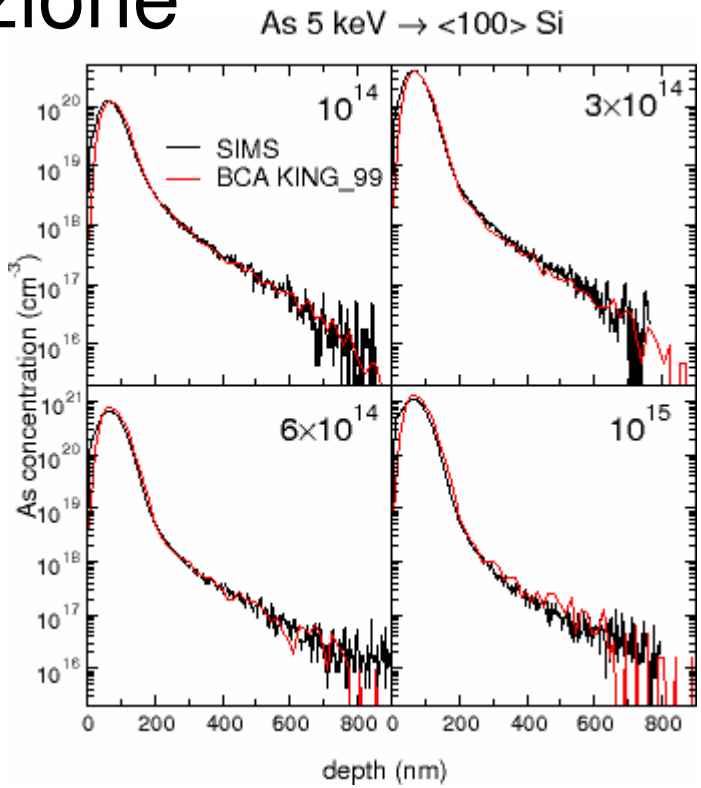

Fig. 2.2: Comparison of measured (SIMS) (**black**) and simulated (**red**) depth distribution profiles of 5 keV As ions implanted in Si at different implantation fluences under <100> channeling orientation. Long penetrating tails due to channeling, evident in the experimental profiles, are reproduced with very good accuracy by MC-BCA simulation

Drogaggio per impiantazione
Damage

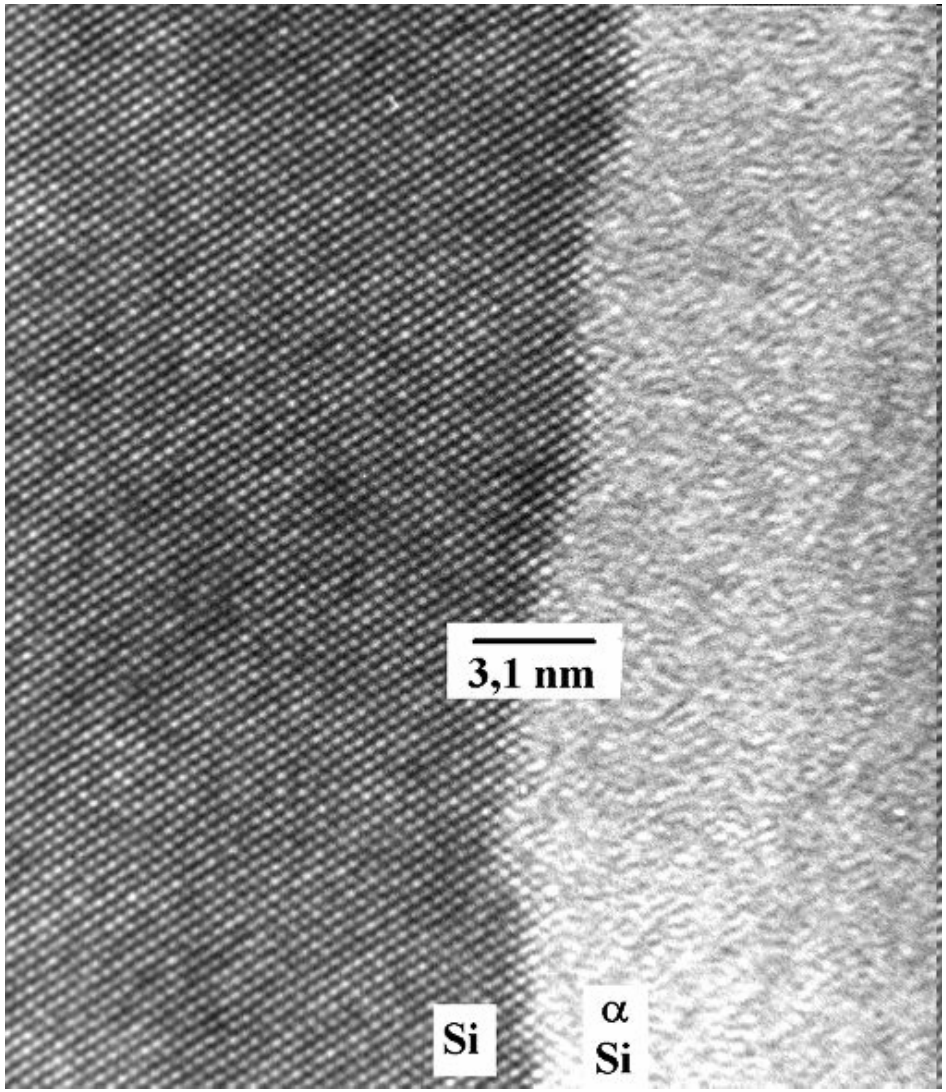

Drogaggio per impiantazione
Annealing

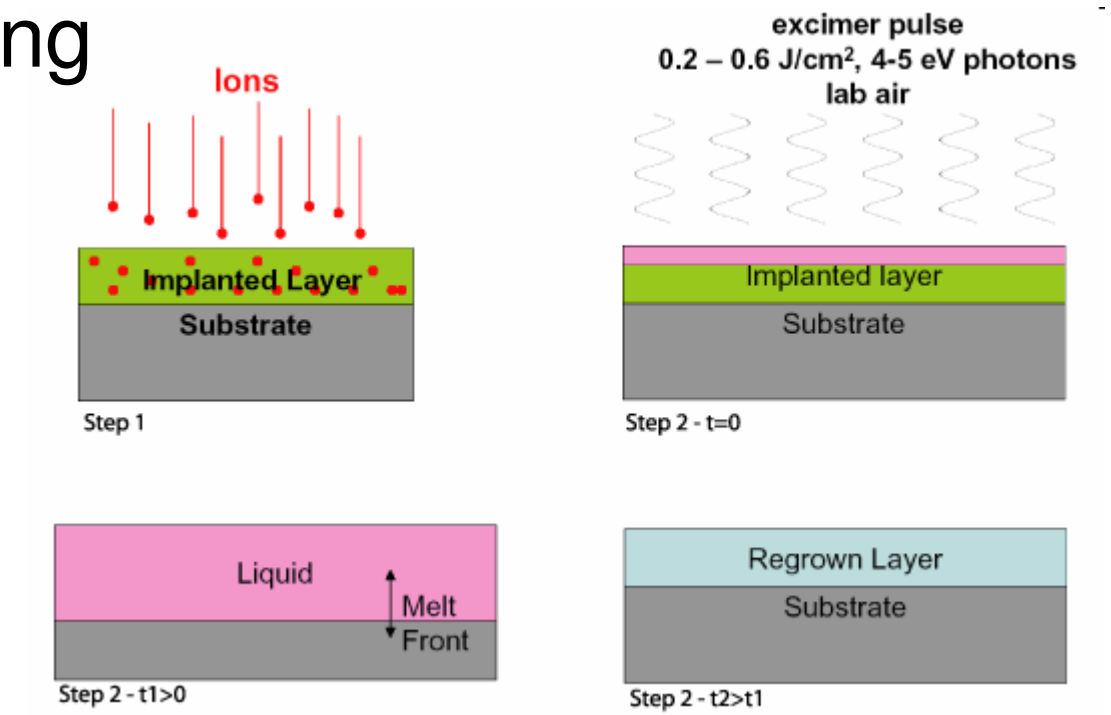

Figure 1 - Schematic of the ion implantation and pulsed-laser melting (II-PLM) process used by our group to synthesize semiconductor alloy films. A semiconductor wafer is first implanted with the alloying species and then irradiated with a single pulse from an excimer laser. The laser energy is converted to heat, which melts through the implant-damaged layer into the underlying substrate. Epitaxial solidification proceeds as heat is extracted into the substrate, resulting in a single-crystalline alloy film on the original substrate.

Drogaggio per infusione

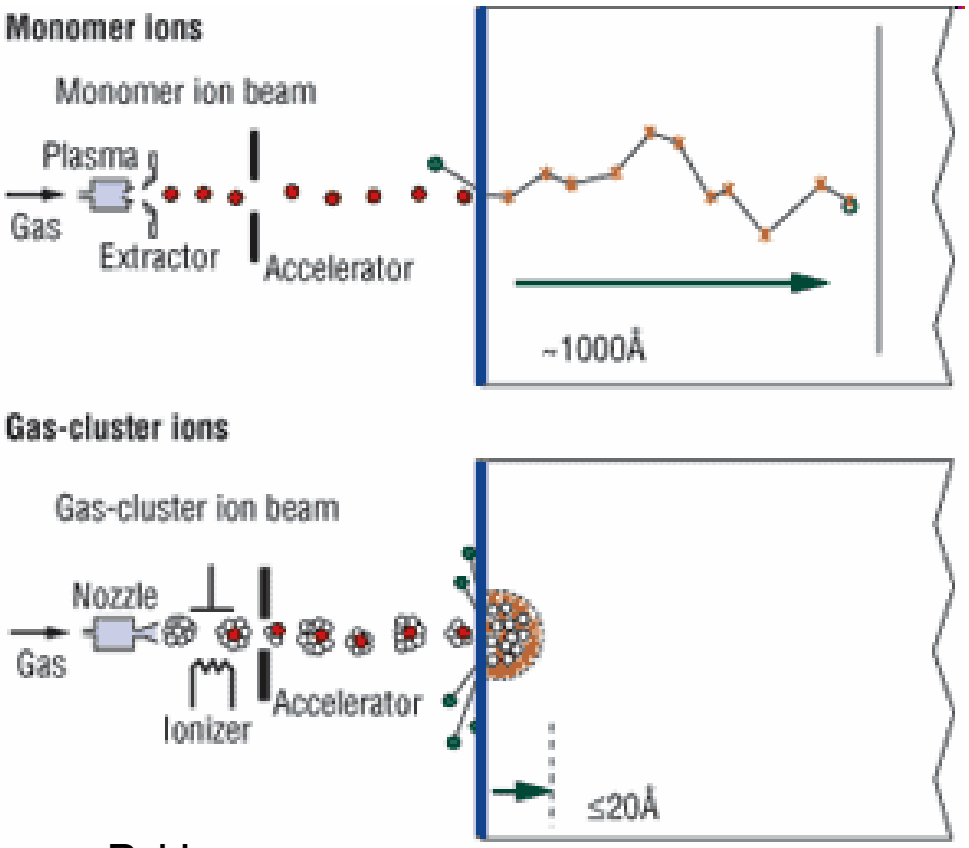

B_2H_6

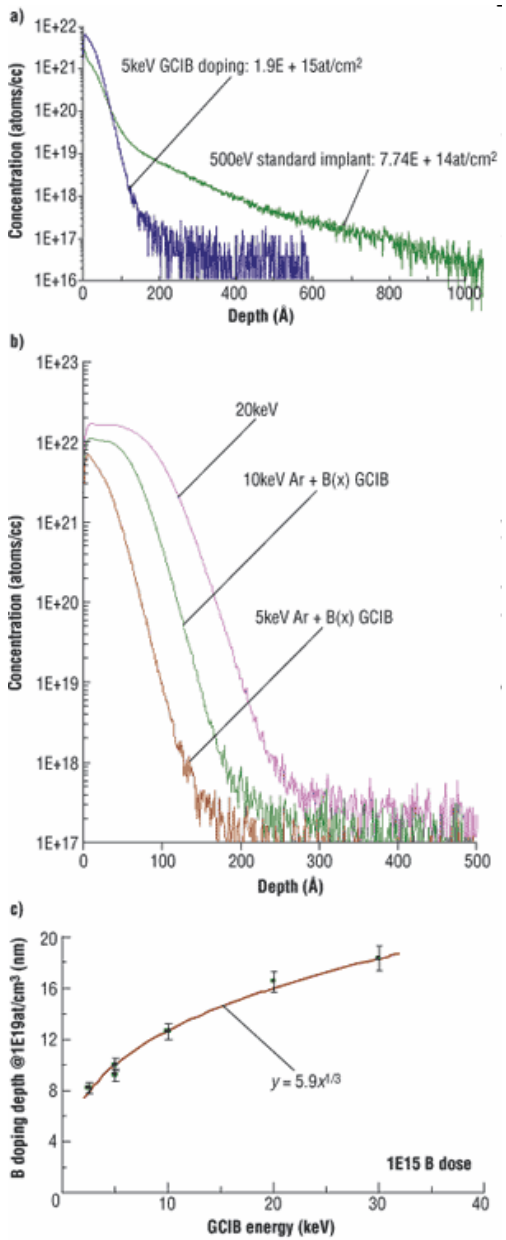

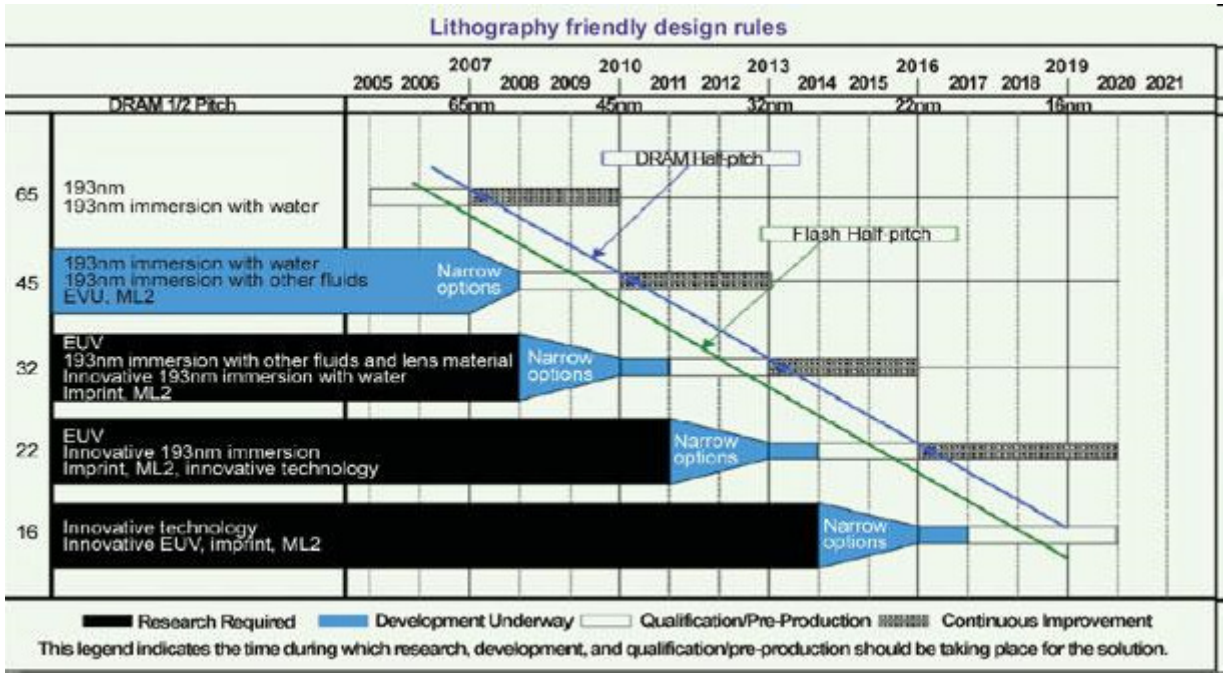
Lithography friendly design rules
2005 2006 2007 2008 2009 2010 2011 2012 2013 2014 2015 2016 2017 2018 2019 2020 2021
DRAM 1/2 Pitch
65nm
45nm
32nm
22nm
16nm
DRAM Half-pitch
Flash Half-pitch
65
193nm
193nm immersion with water
45
193nm immersion with water
193nm immersion with other fluids
EVU, ML2
Narrow options
32
EUV
193nm immersion with other fluids and lens material
Innovative 193nm immersion with water
Imprint, ML2
Narrow options
22
EUV
Innovative 193nm immersion
Imprint, ML2, innovative technology
Narrow options
16
Innovative technology
Innovative EUV, imprint, ML2
Narrow options
Research Required
Development Underway
Qualification/Pre-Production
Continuous Improvement
This legend indicates the time during which research, development, and qualification/pre-production should be taking place for the solution.