Applicazioni diodo MOS

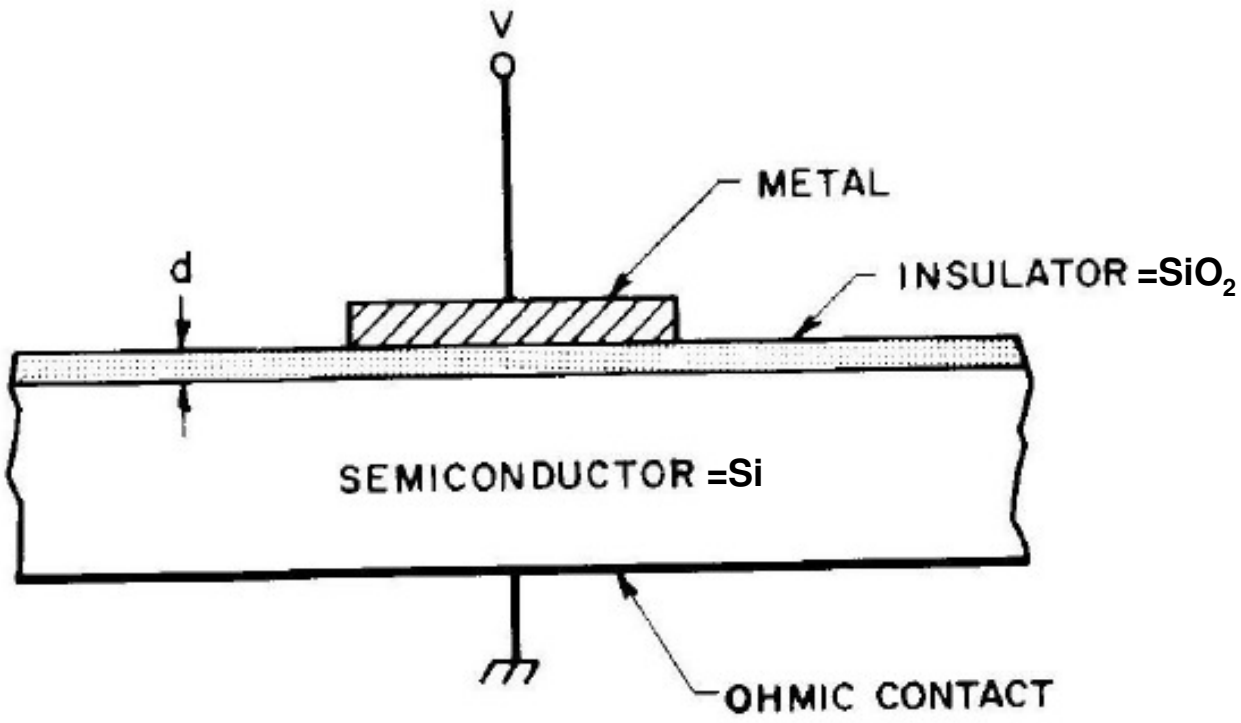

Charge Coupled Device

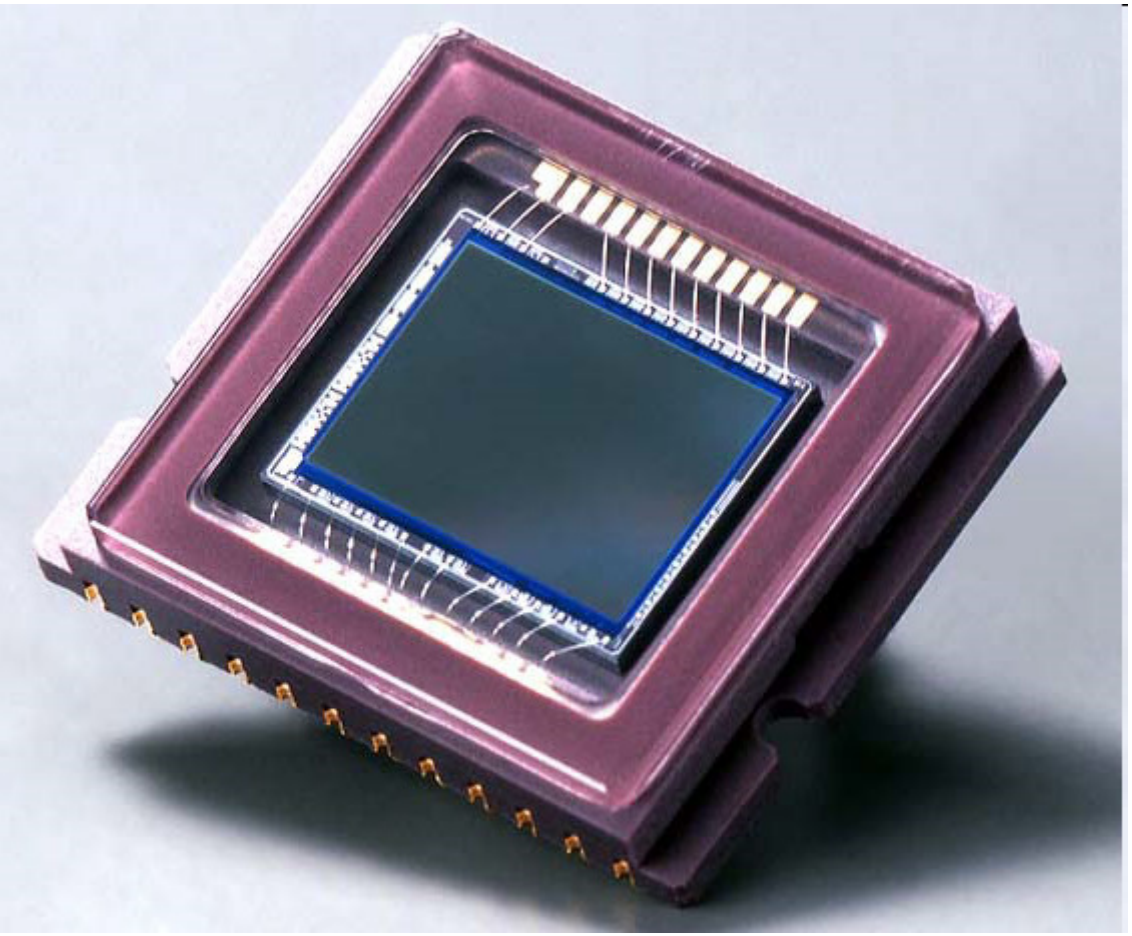

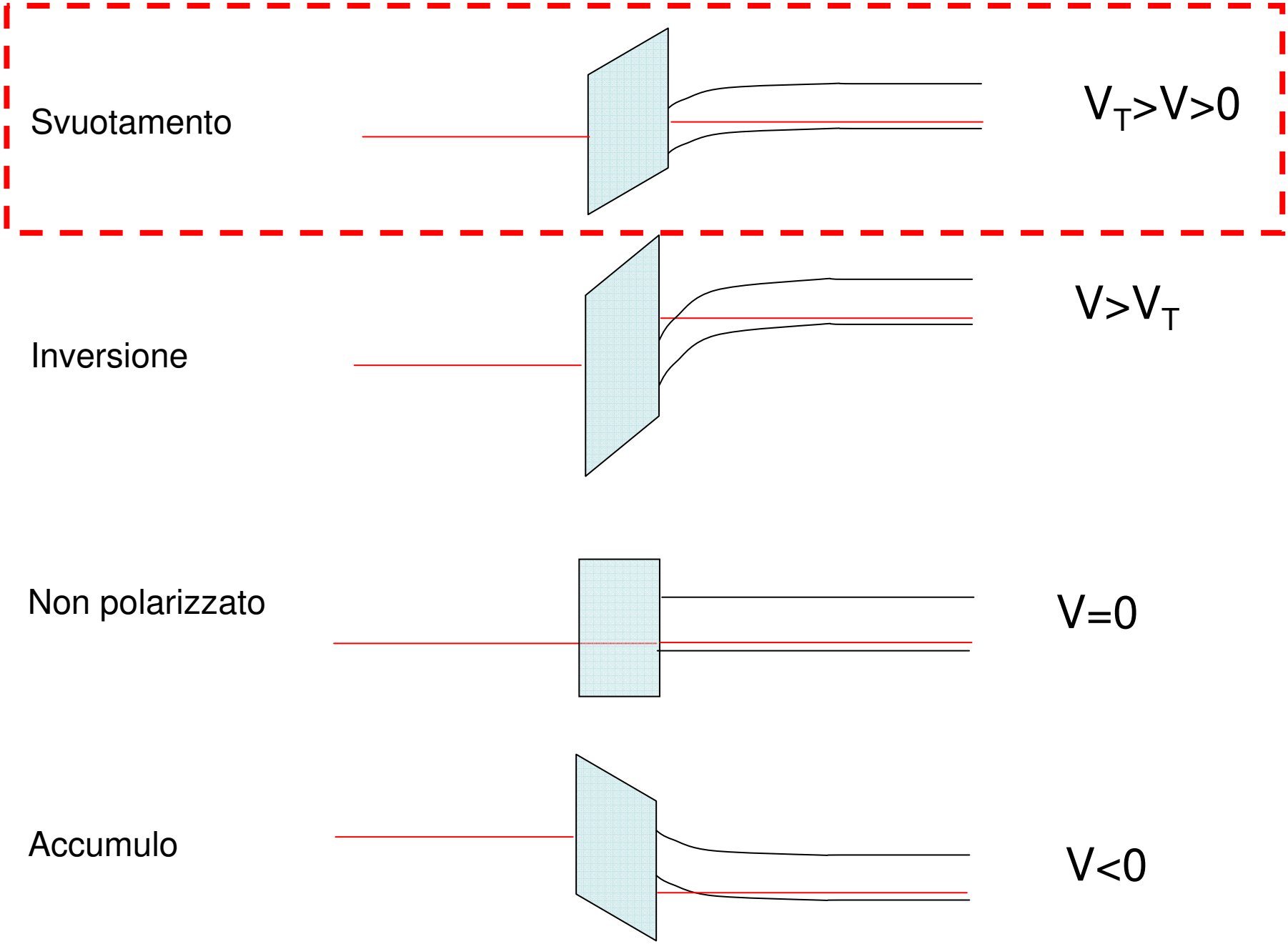
Svuotamento
$V_T>V>0$
Inversione
$V>V_T$
Non polarizzato
$V=0$
Accumulo
$V<0$

Assorbimento di un fotone

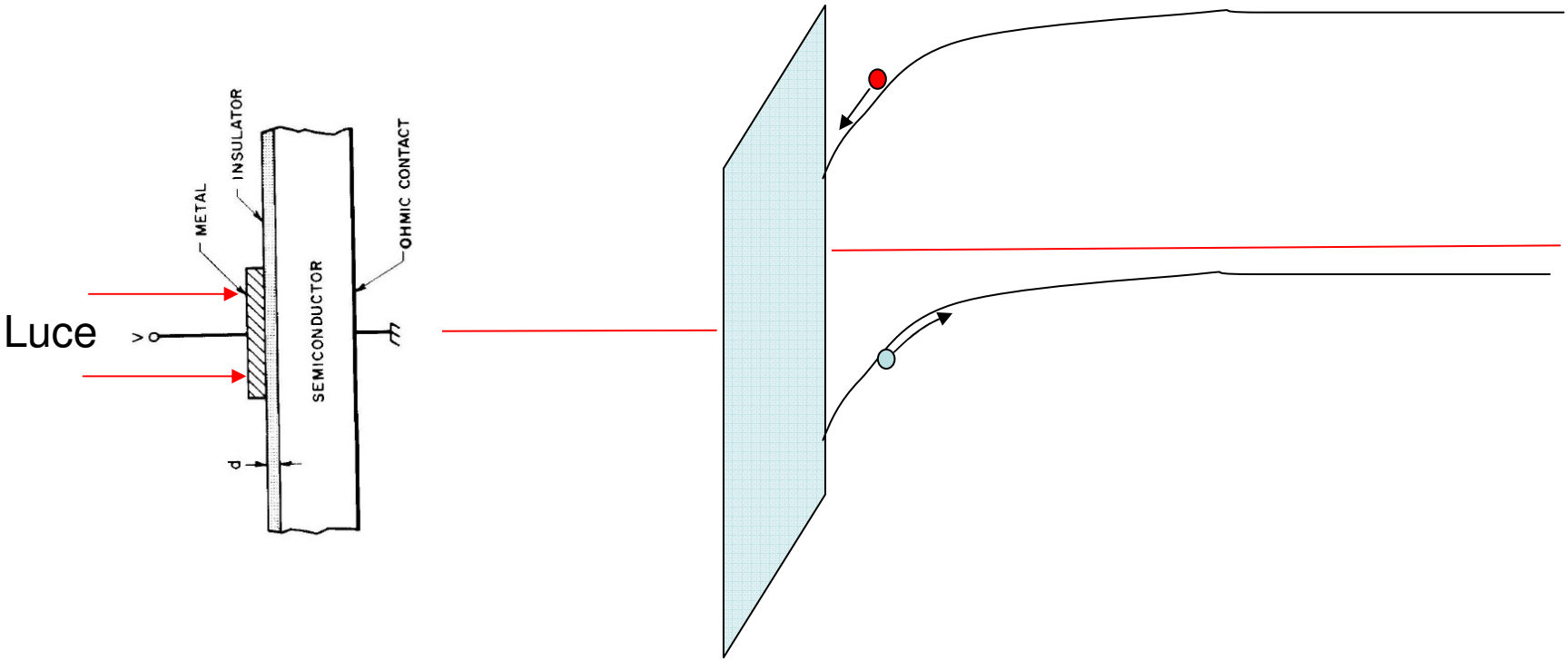

Assorbimento di un fotone

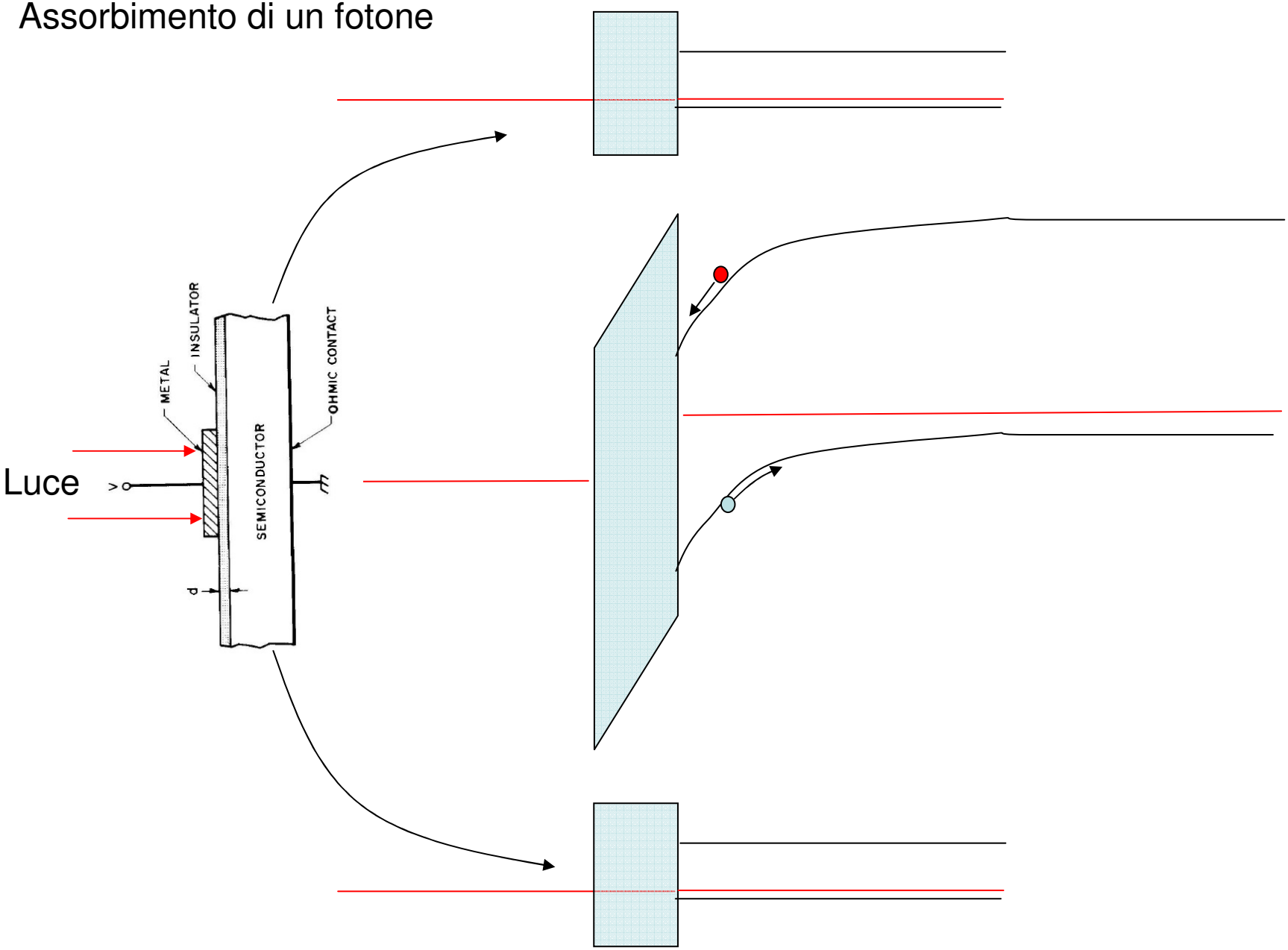

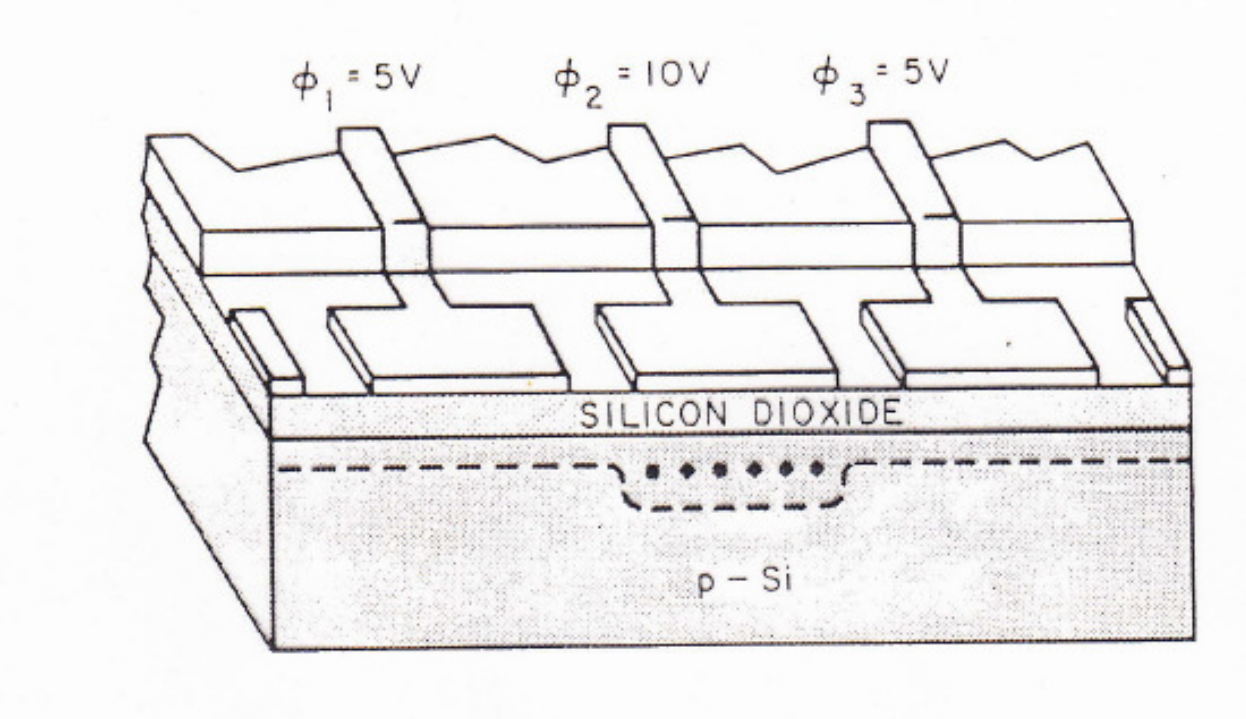
ϕ_1 = 5V
ϕ_2 = 10V
ϕ_3 = 5V
SILICON DIOXIDE
p – Si

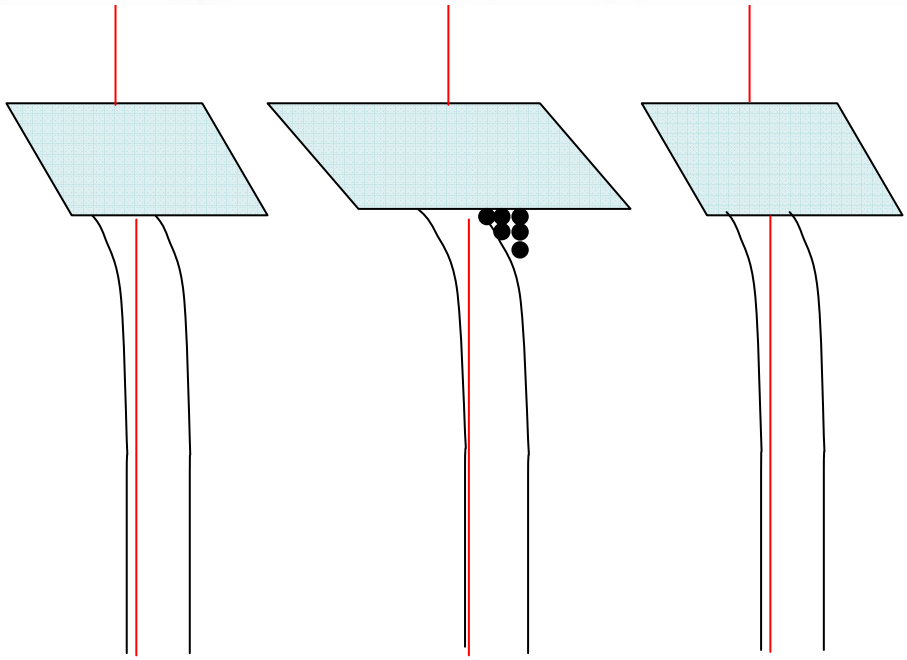

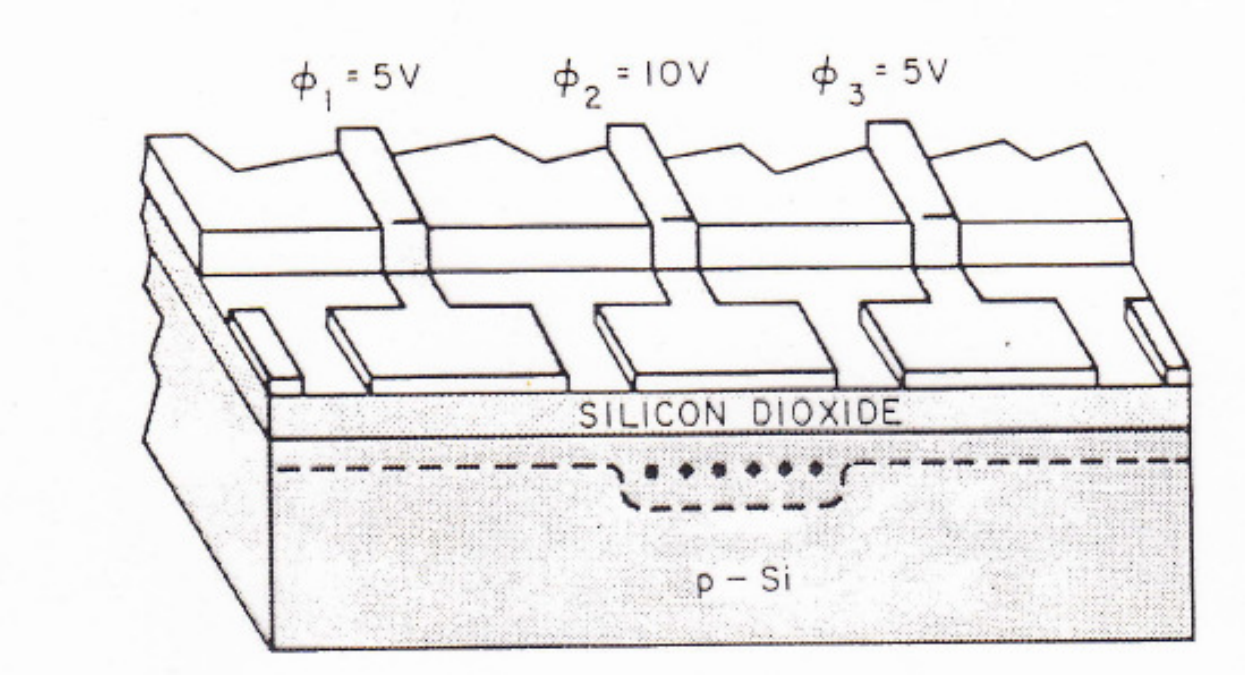
$\phi_1 = 5V$
$\phi_2 = 10V$
$\phi_3 = 5V$
SILICON DIOXIDE
p – Si

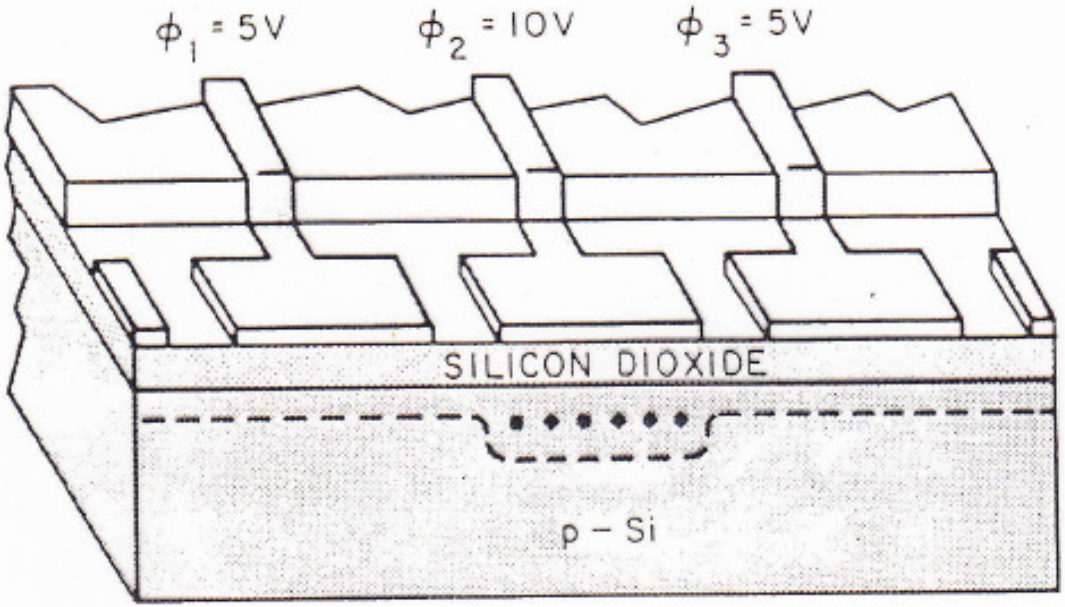
$\phi_1 = 5V$
$\phi_2 = 10V$
$\phi_3 = 5V$
SILICON DIOXIDE
p – Si

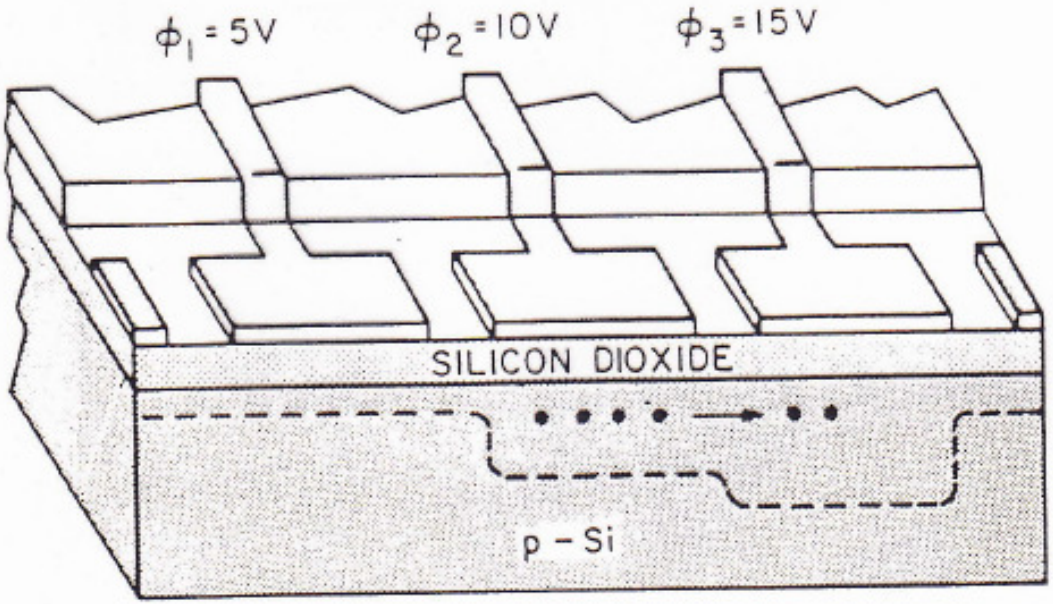
$\phi_1 = 5V$
$\phi_2 = 10V$
$\phi_3 = 15V$
SILICON DIOXIDE
p – Si

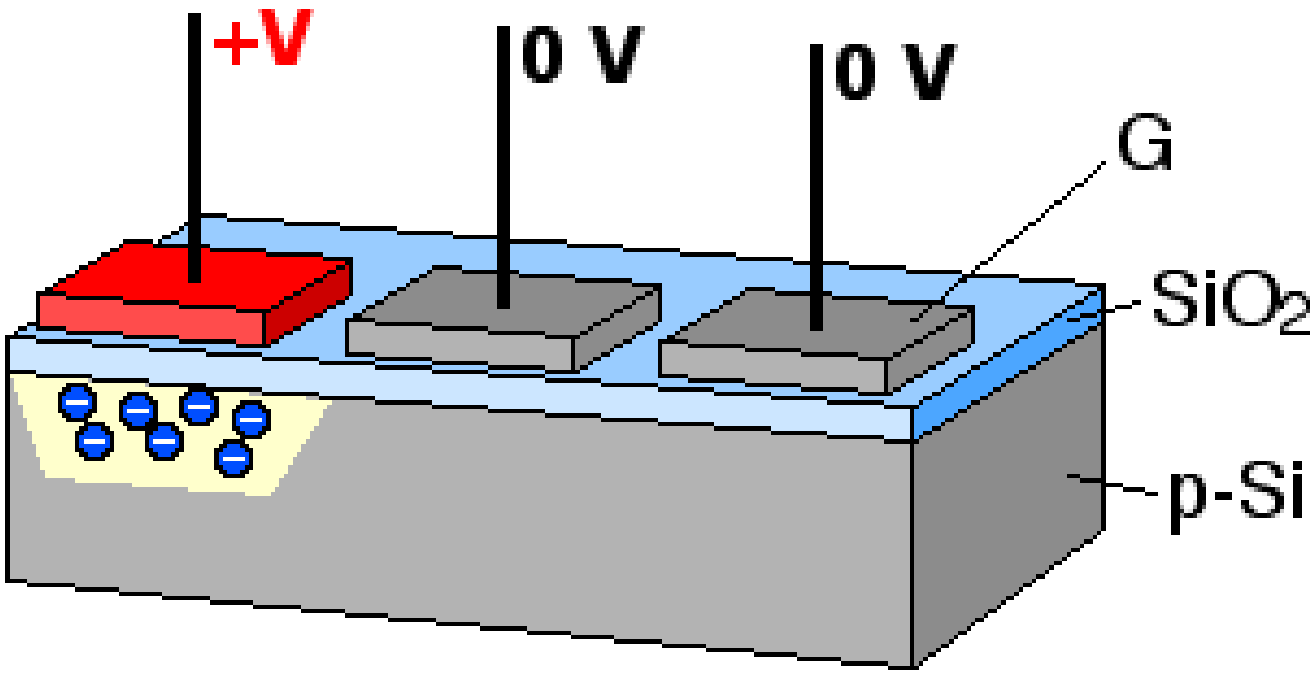
+V
0 V
0 V
G
SiO2
p-Si

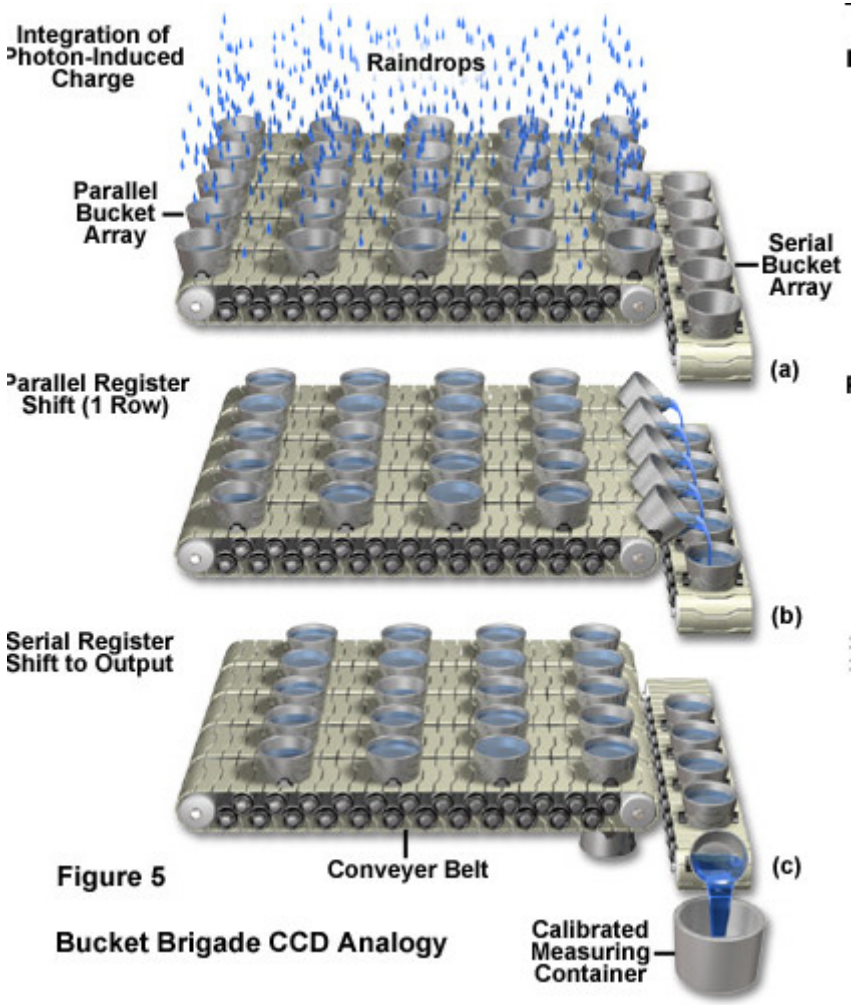

Figure 5

Bucket Brigade CCD Analogy

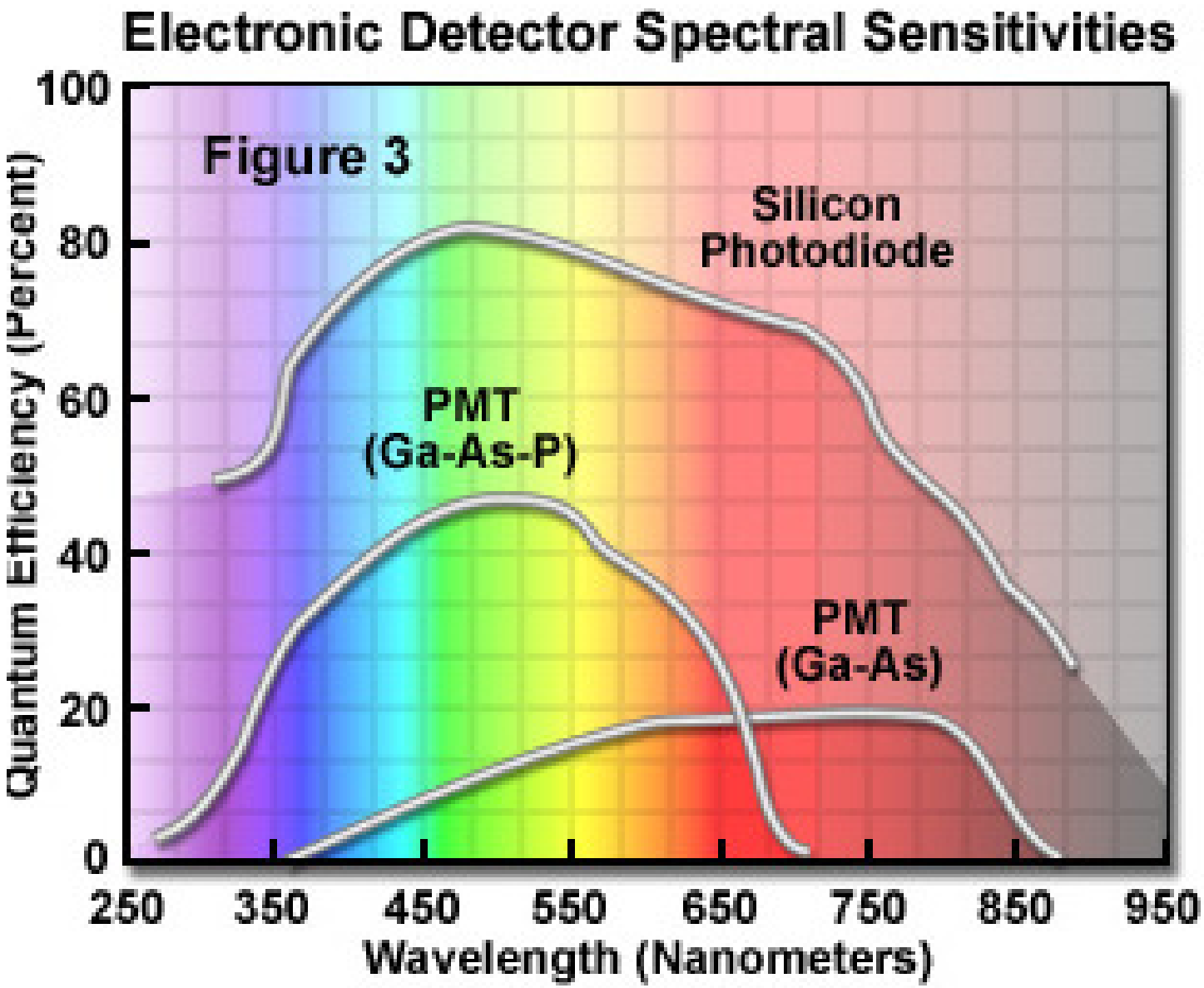
Electronic Detector Spectral Sensitivities
Figure 3
Silicon
Photodiode
PMT
(Ga-As-P)
PMT
(Ga-As)
Quantum Efficiency (Percent)
100
80
60
40
20
0
250
350
450
550
650
750
850
950
Wavelength (Nanometers)

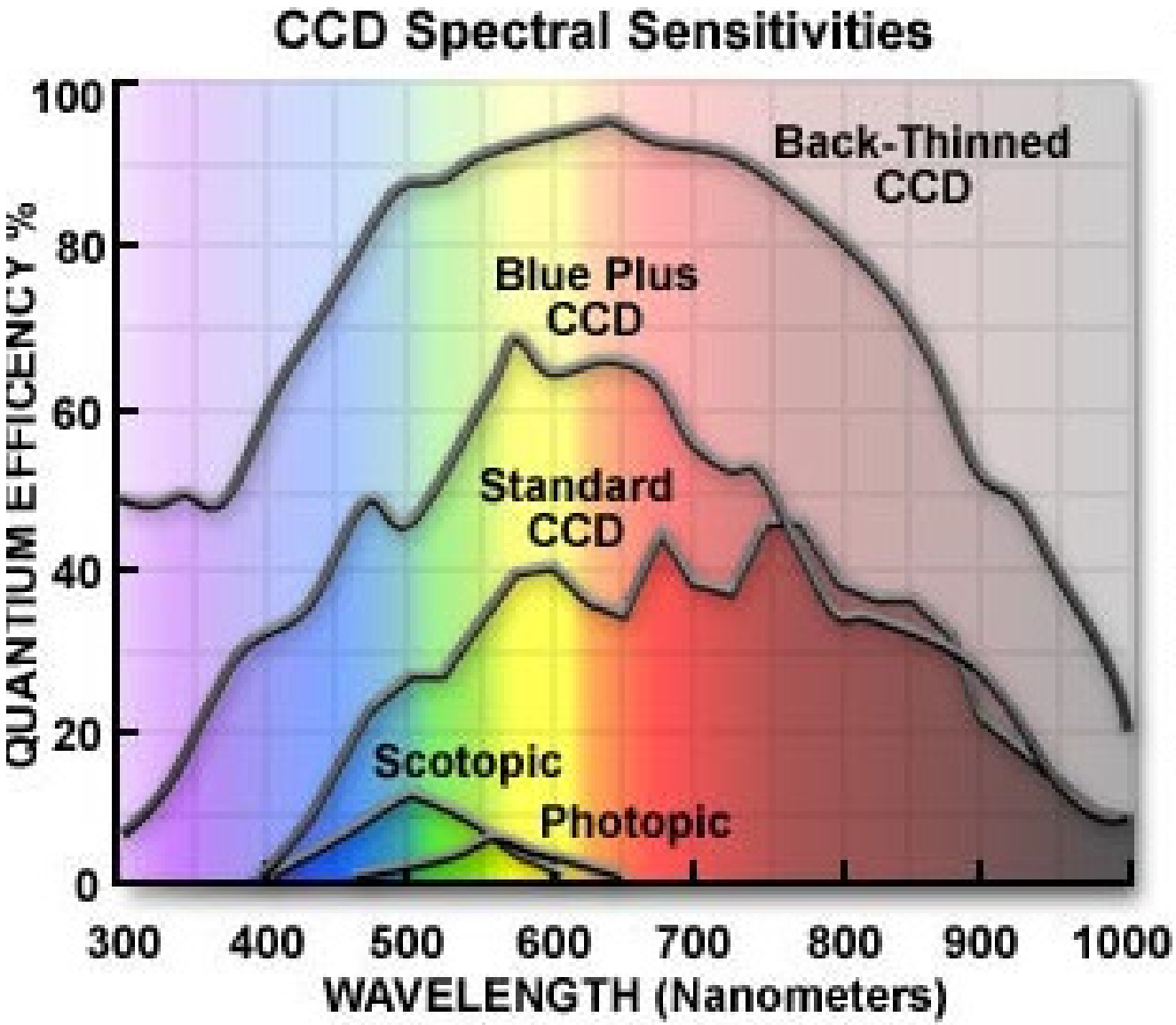
CCD Spectral Sensitivities
QUANTIUM EFFICENCY %
100
80
60
40
20
0
Back-Thinned CCD
Blue Plus CCD
Standard CCD
Scotopic
Photopic
300
400
500
600
700
800
900
1000
WAVELENGTH (Nanometers)

Figure 3

NOISE

Readout noise: indipendente dal tempo di esposizione
(2 to 20 electrons rms per pixel)

Dark noise: proporzionale al tempo di esposizione
(0.01 to 50 electrons per pixel per second)

Photon noise: proporzionale a SQRT(N)

DIfferenze fra pixels

Hot spots, dark spots

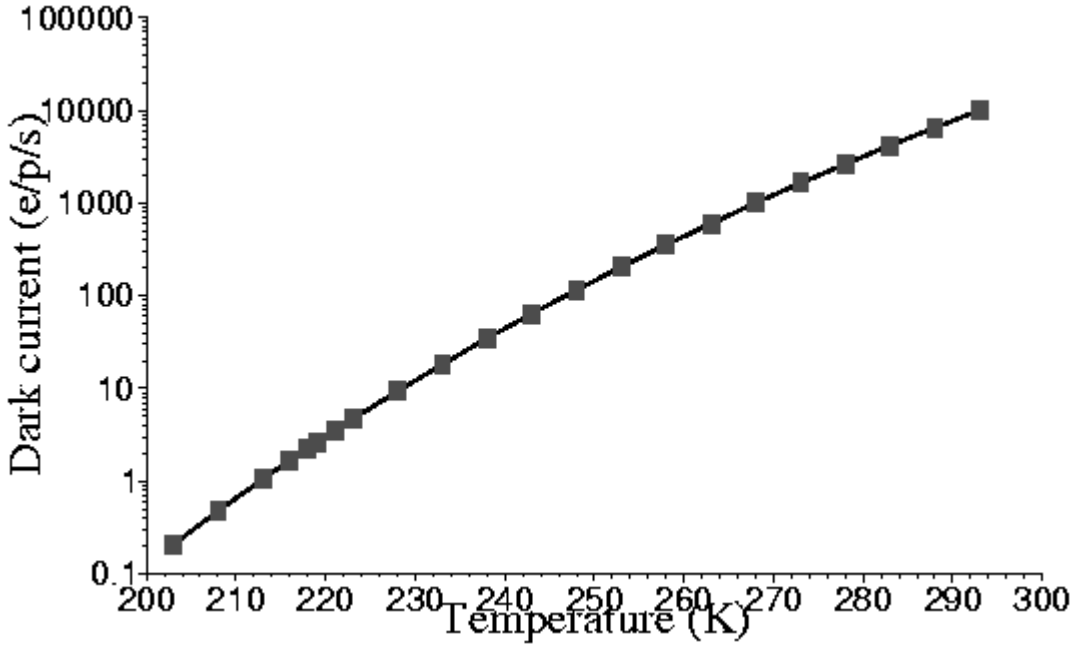
Dark current (e/p/s)
100000
10000
1000
100
10
1
0.1
200
210
220
230
240
250
260
270
280
290
300
Temperature (K)

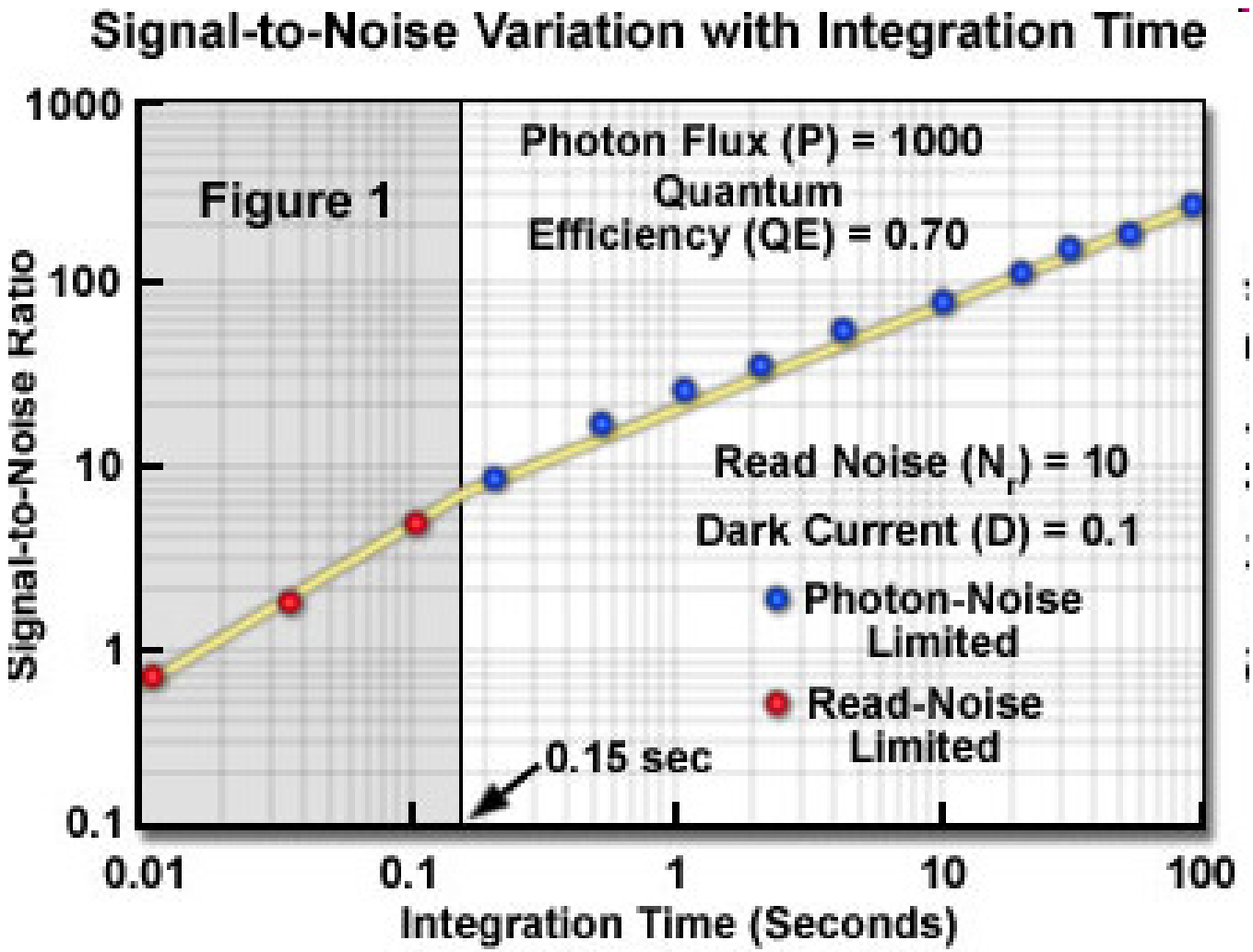
Signal-to-Noise Variation with Integration Time
Figure 1
Photon Flux (P) = 1000
Quantum
Efficiency (QE) = 0.70
Read Noise (N_r) = 10
Dark Current (D) = 0.1
Photon-Noise Limited
Read-Noise Limited
0.15 sec
Signal-to-Noise Ratio
1000
100
10
1
0.1
0.01
0.1
1
10
100
Integration Time (Seconds)

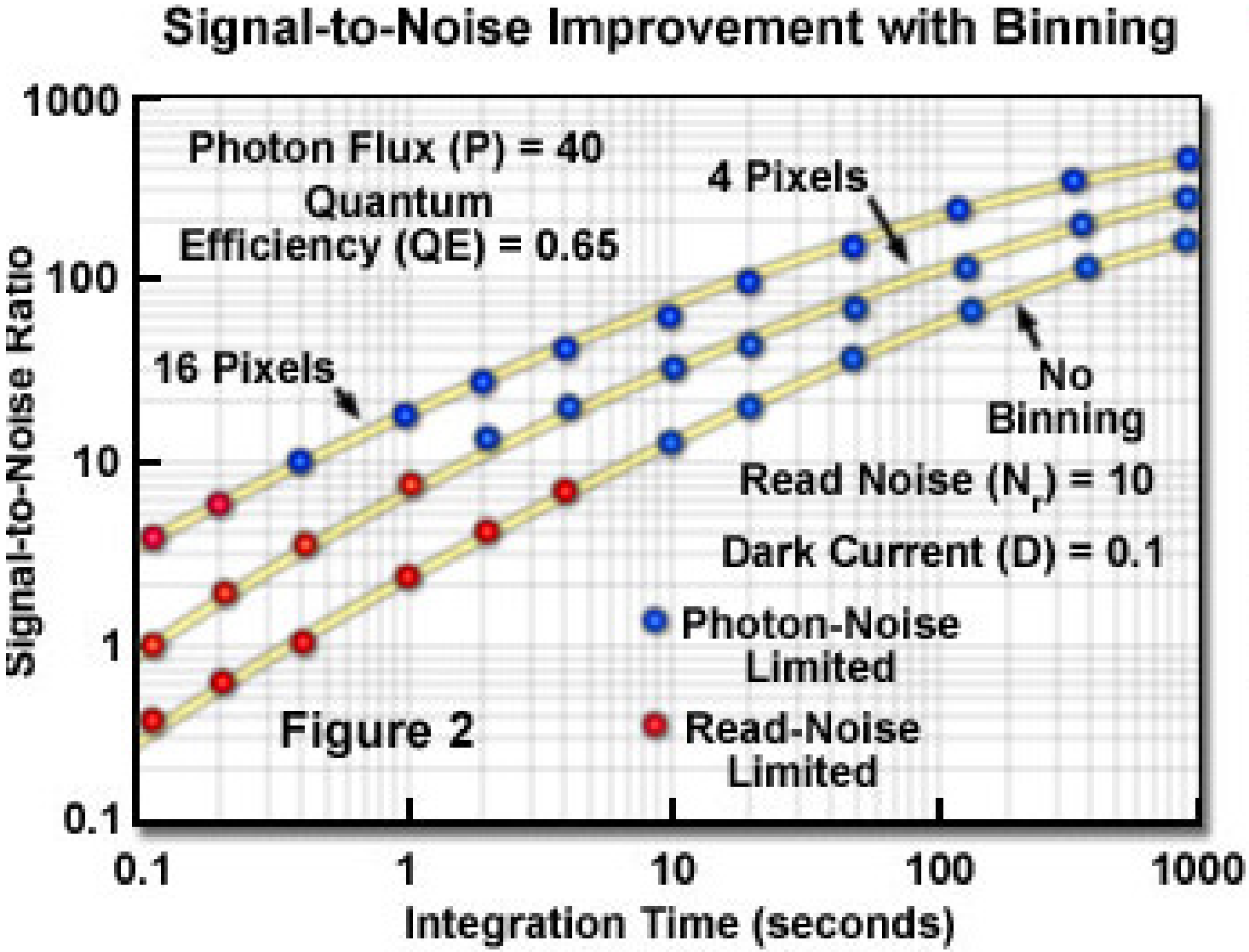
Signal-to-Noise Improvement with Binning
Photon Flux (P) = 40
Quantum
Efficiency (QE) = 0.65
4 Pixels
16 Pixels
No
Binning
Read Noise (N_r) = 10
Dark Current (D) = 0.1
Photon-Noise
Limited
Read-Noise
Limited
Figure 2
Signal-to-Noise Ratio
1000
100
10
1
0.1
0.1
1
10
100
1000
Integration Time (seconds)

Pixelling

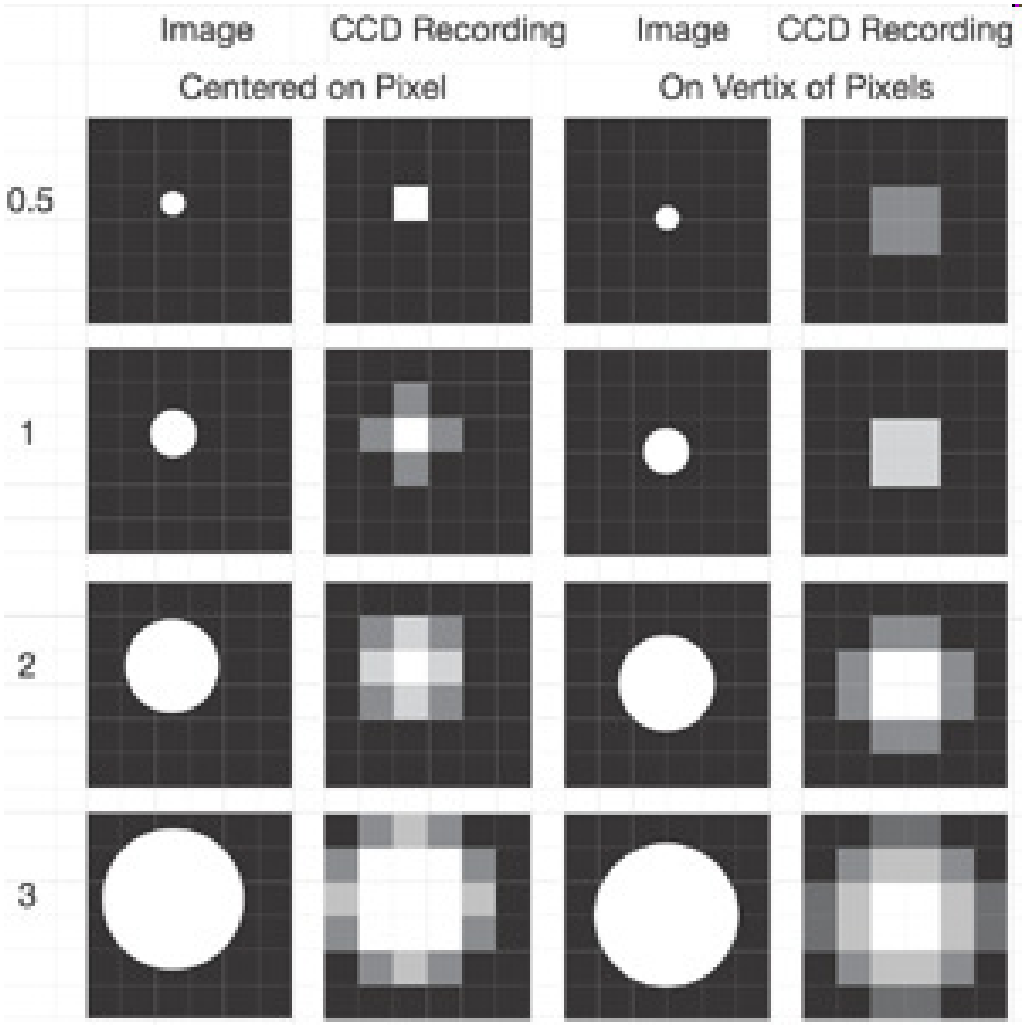
Image
CCD Recording
Image
CCD Recording
Centered on Pixel
On Vertix of Pixels
0.5
1
2
3

Common CCD Image Sensor Formats

Figure 4

(Dimensions in Millimeters)

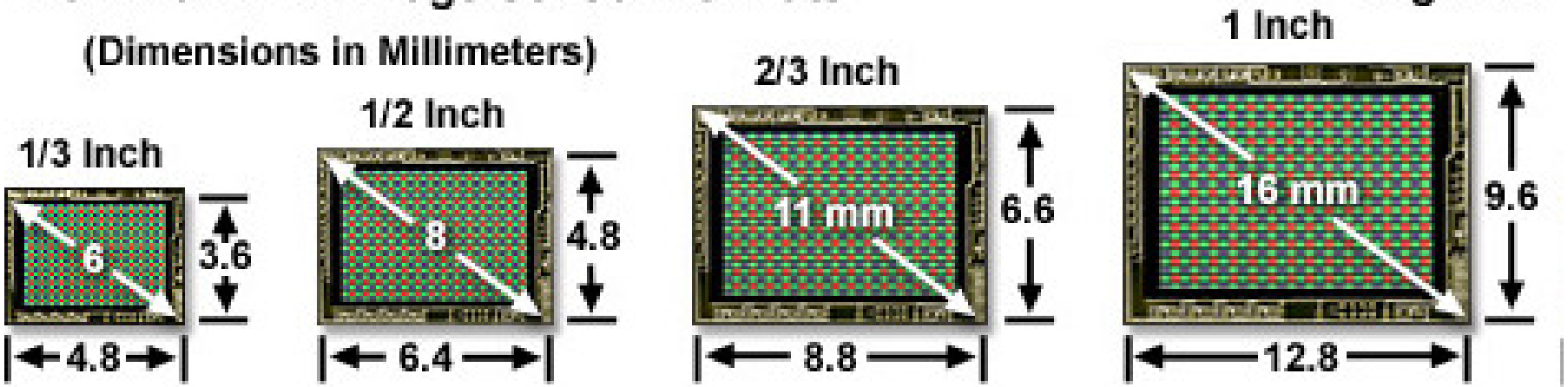

Foto a colori

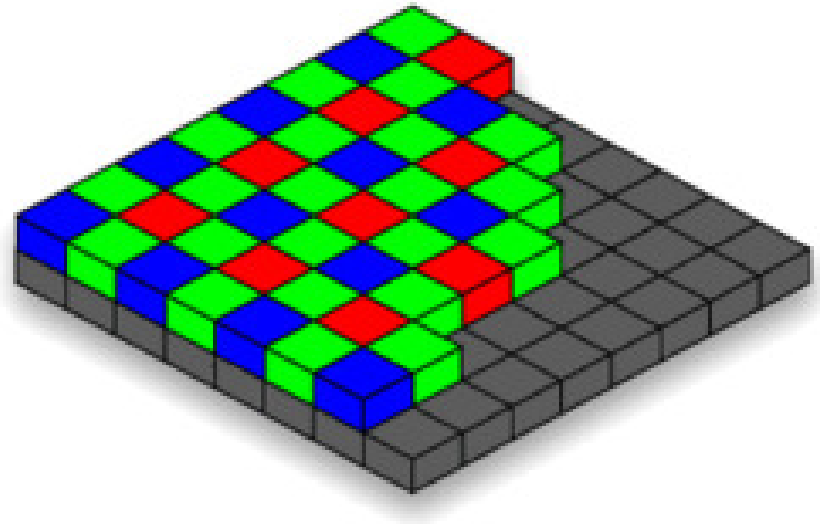

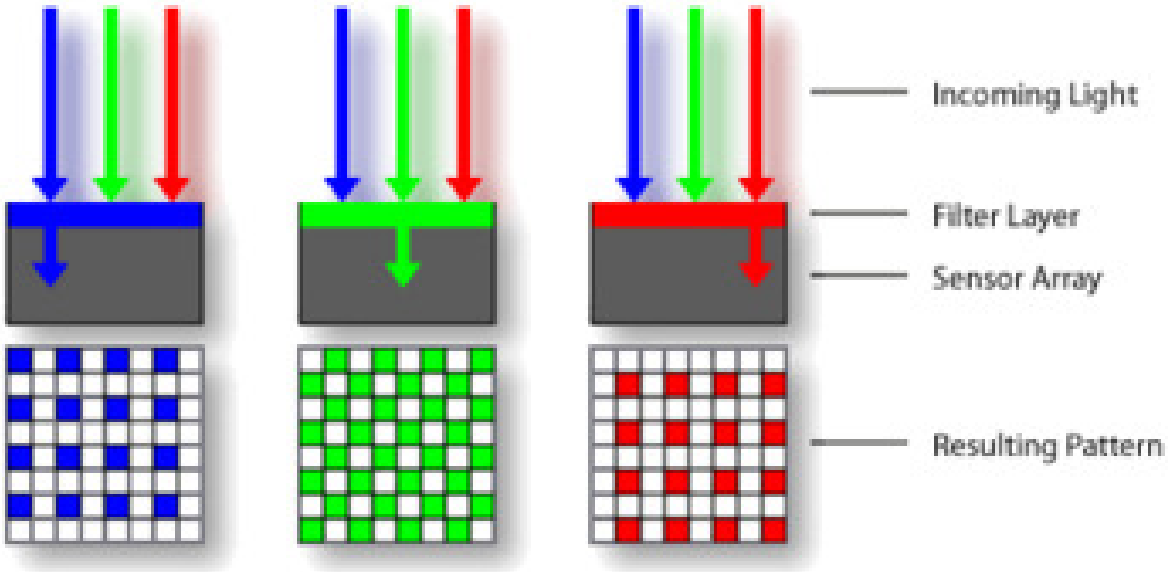

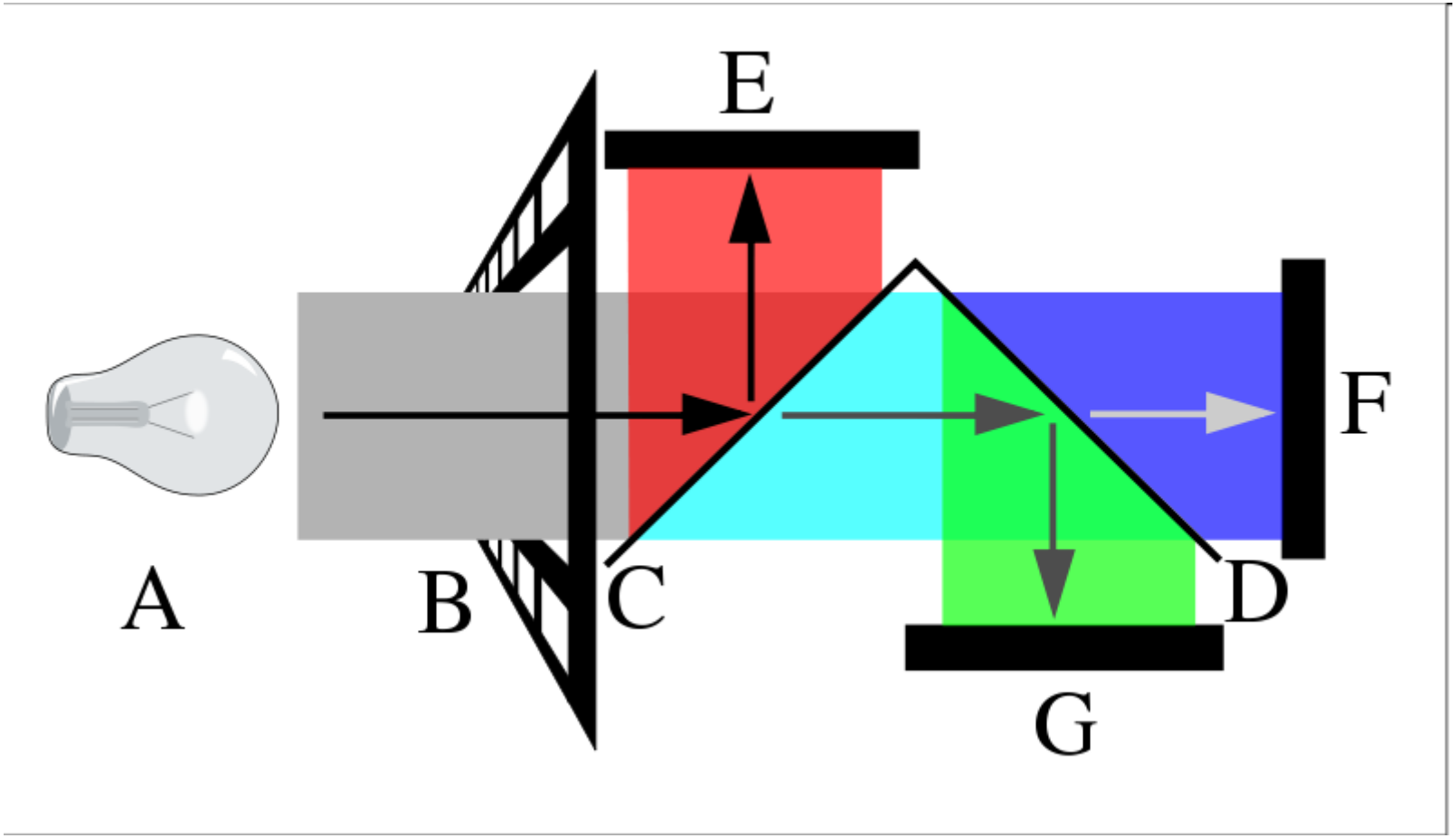
E
F
A
B
C
D
G

CCD vs CMOS

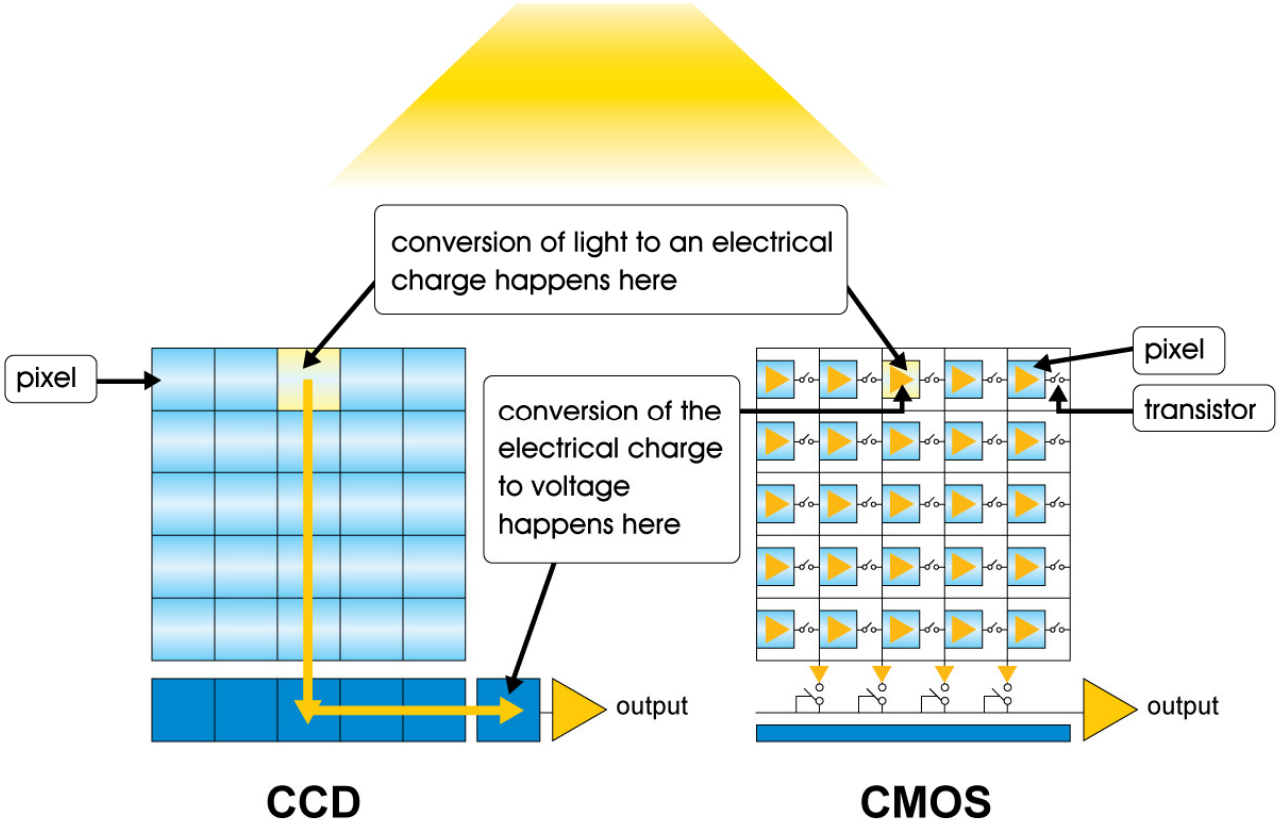
conversion of light to an electrical charge happens here
pixel
conversion of the electrical charge to voltage happens here
output
CCD
pixel
transistor
output
CMOS

Feature and Performance Comparison

Feature	CCD	CMOS
Signal out of pixel	Electron packet	Voltage
Signal out of chip	Voltage (analog)	Bits (digital)
Signal out of camera	Bits (digital)	Bits (digital)
System Noise	Low	Moderate
Responsivity	Moderate	Slightly better
Dynamic Range	High	Moderate
Uniformity	High	Low to Moderate
Speed	Moderate to High	Higher
Biasing and Clocking	Multiple, higher voltage	Single, low-voltage

Electrically Erasable and Programmable Read Only Memory

From Computer Desktop Encyclopedia
© 2005 The Computer Language Co. Inc.

EEPROM and Flash Transistor

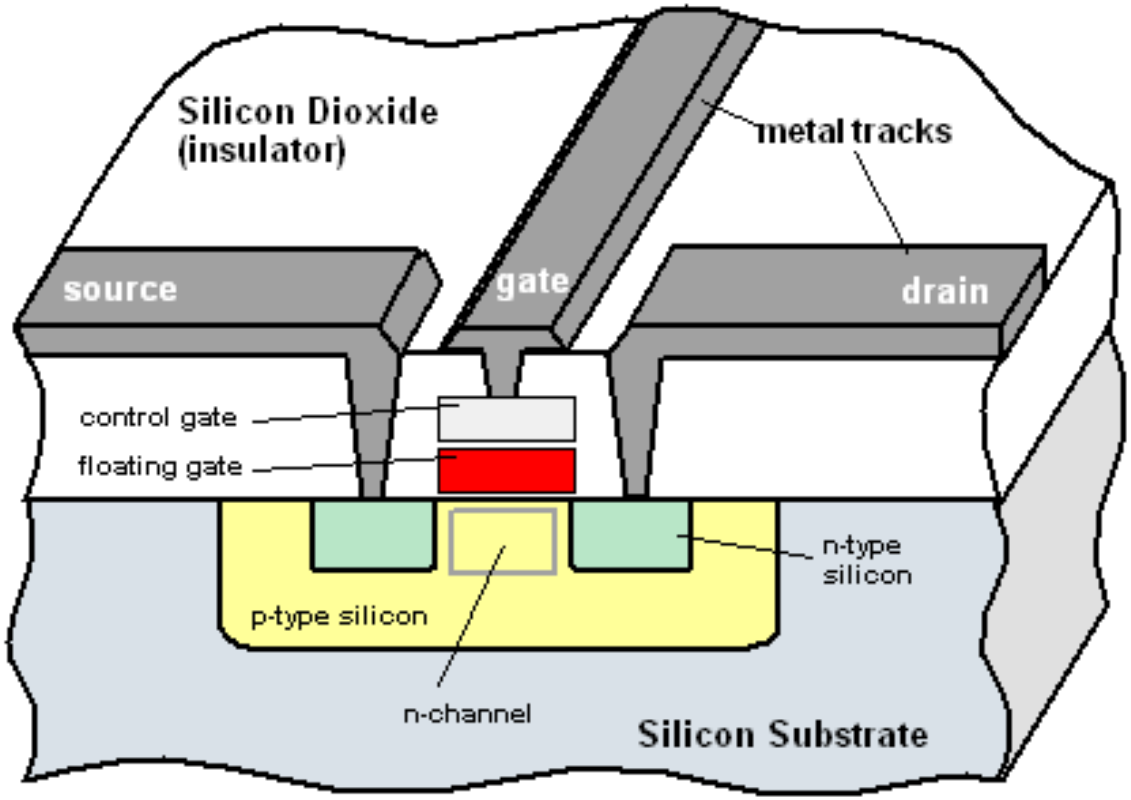

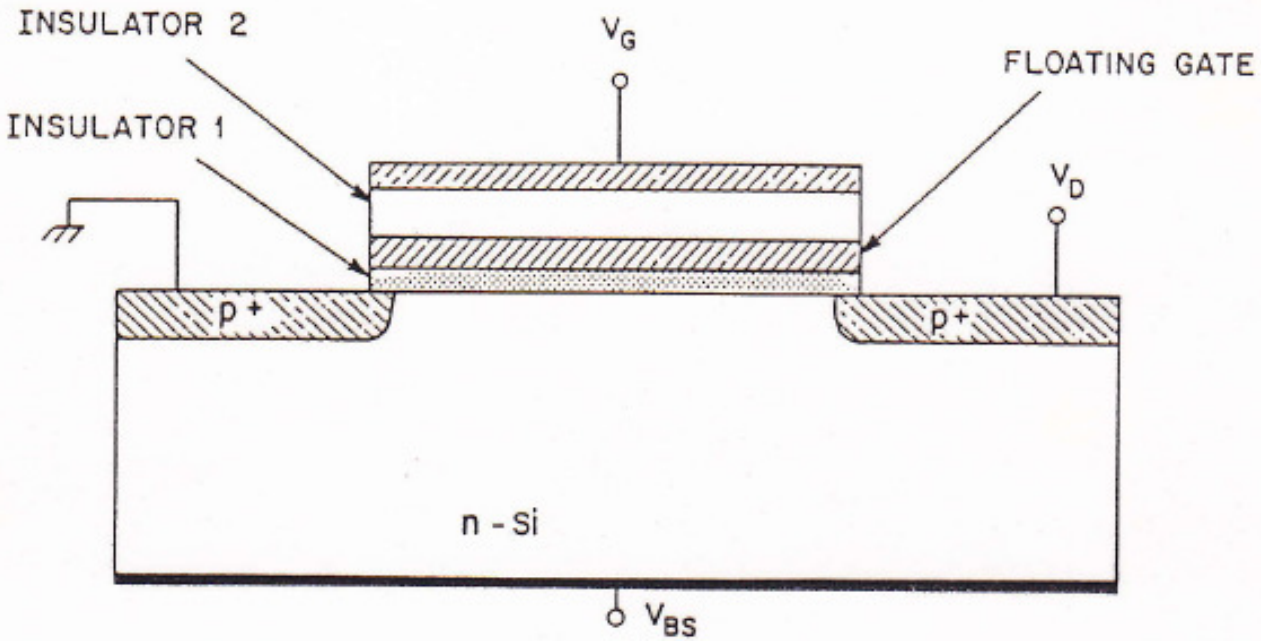
INSULATOR 2
INSULATOR 1
V_G
FLOATING GATE
V_D
p+
p+
n - Si
V_{BS}

Stato OFF

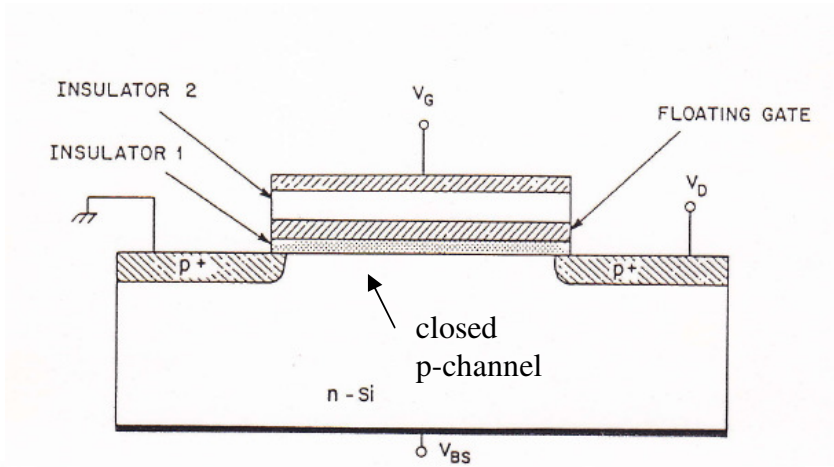
INSULATOR 2
INSULATOR 1
V_G
FLOATING GATE
V_D
p+
p+
closed
p-channel
n - Si
V_{BS}

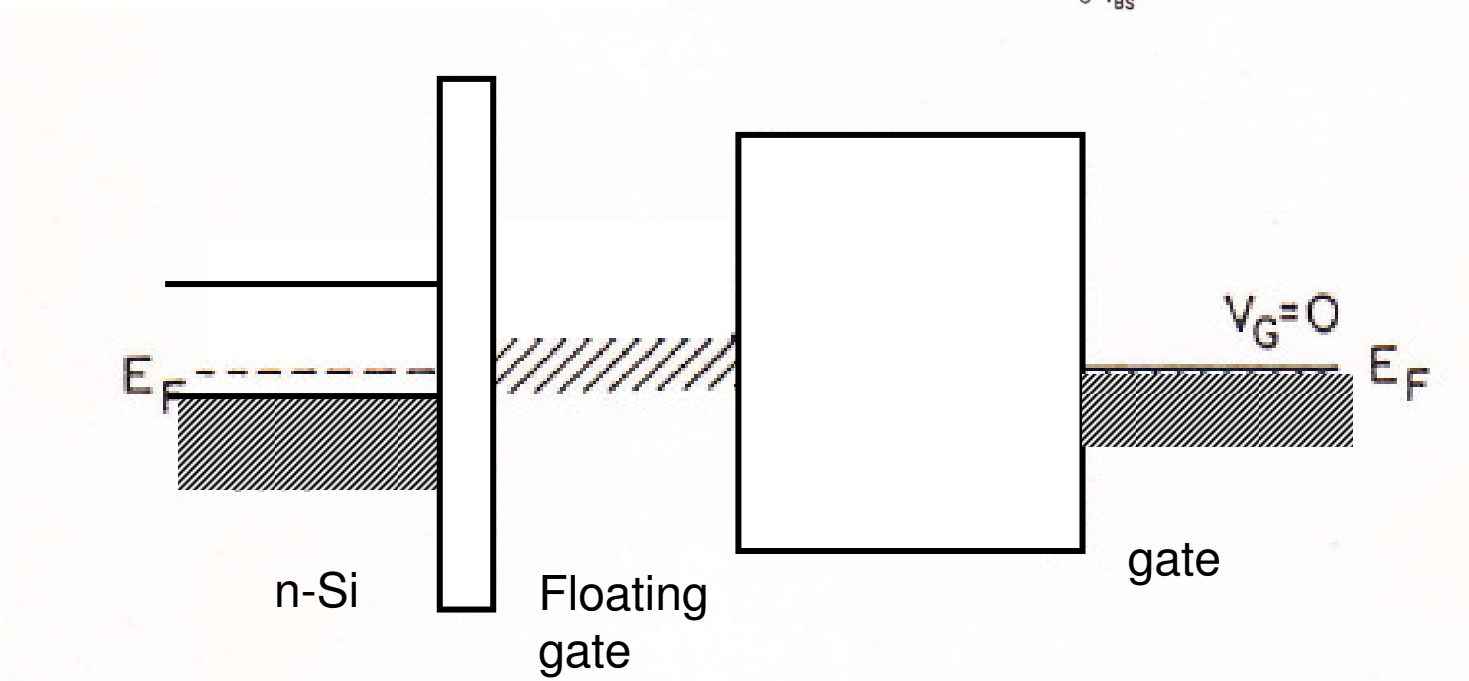
E_F
$V_G=0$
E_F
n-Si
Floating
gate
gate

Stato ON

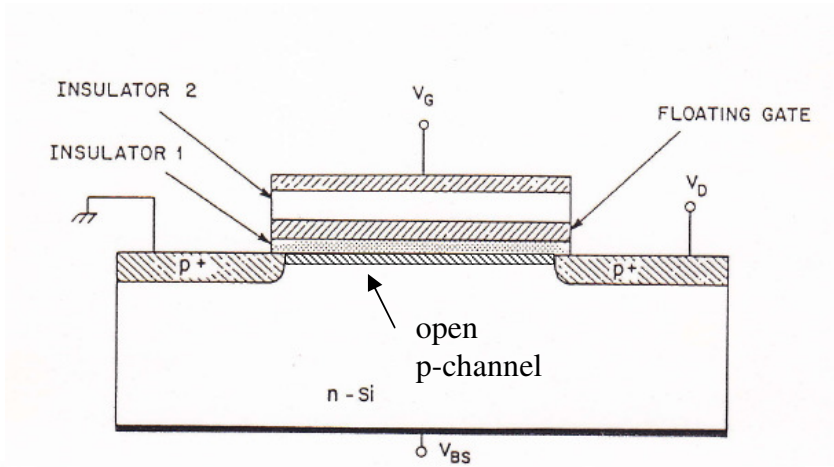
INSULATOR 2
INSULATOR 1
V_G
FLOATING GATE
V_D
p+
p+
open
p-channel
n - Si
V_{BS}

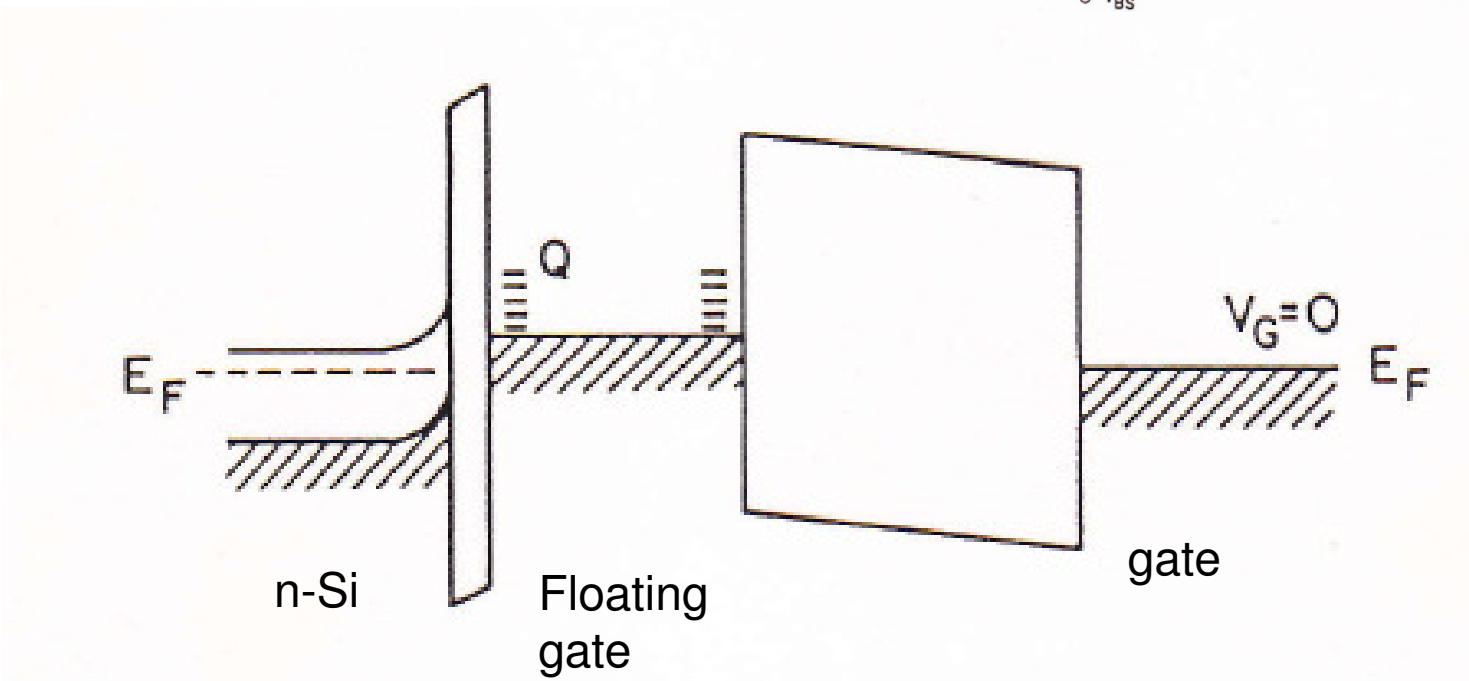
Q
E_F
$V_G=0$
E_F
n-Si
Floating
gate
gate

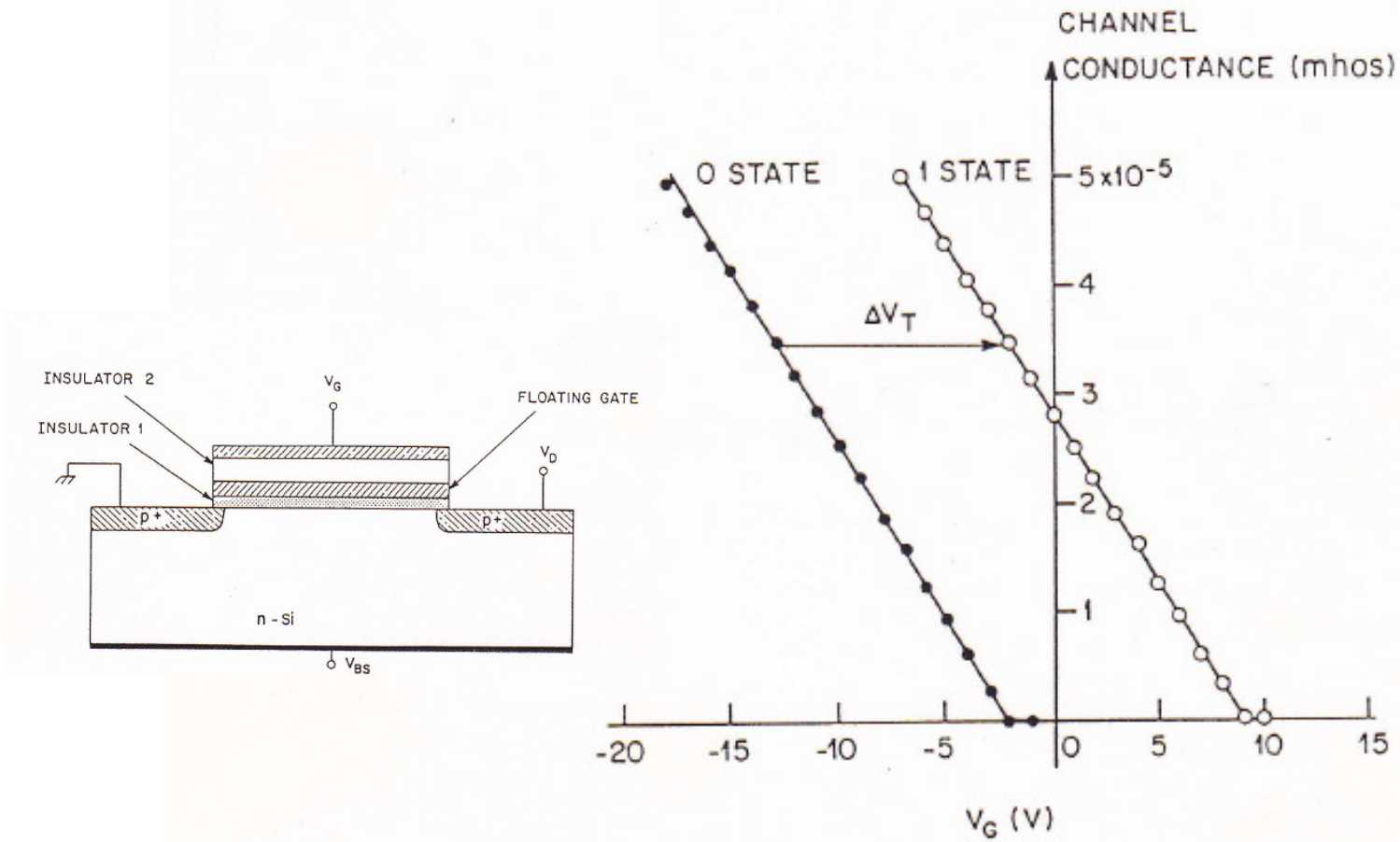

Fig. 63 Channel conductance before (0 state) and after (1 state) writing operation. (After Card and Worrall, Ref. 73.)

SCRITTURA

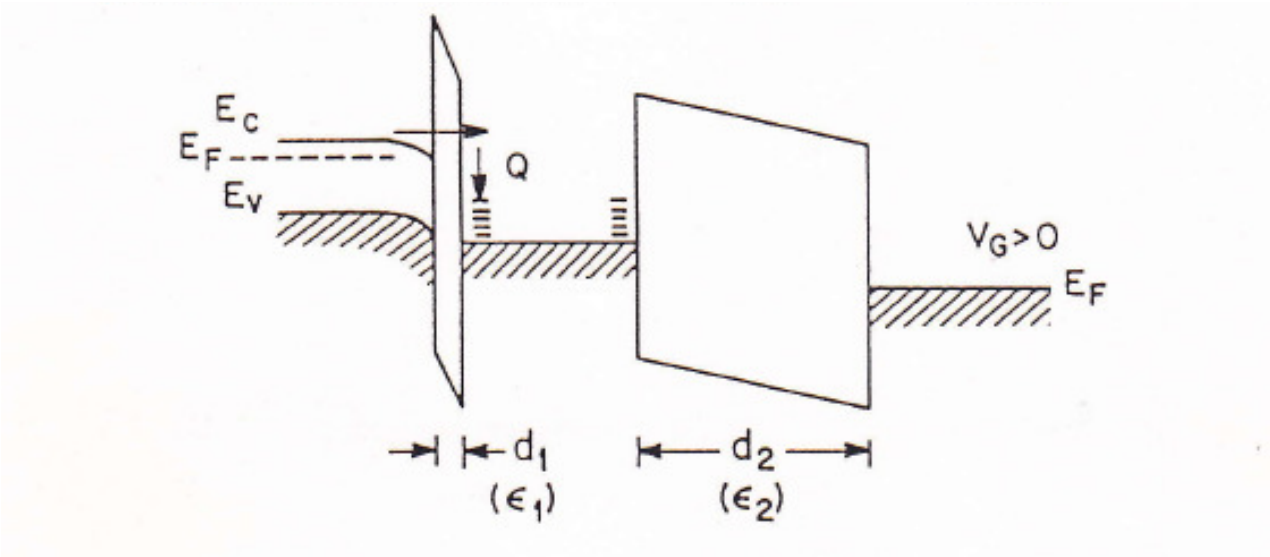

SCRITTURA

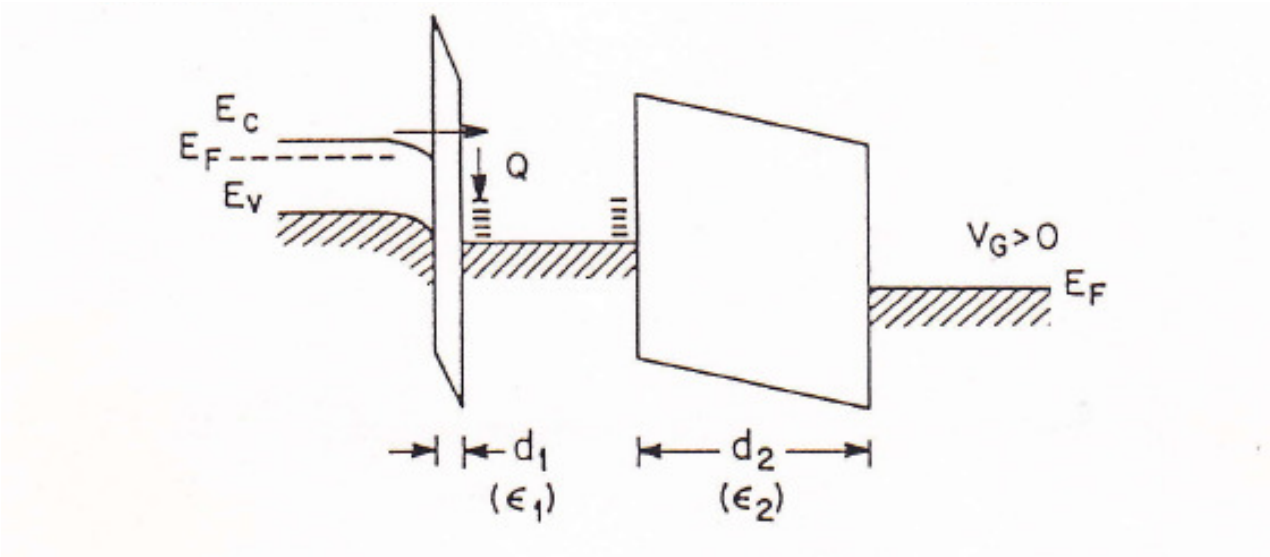
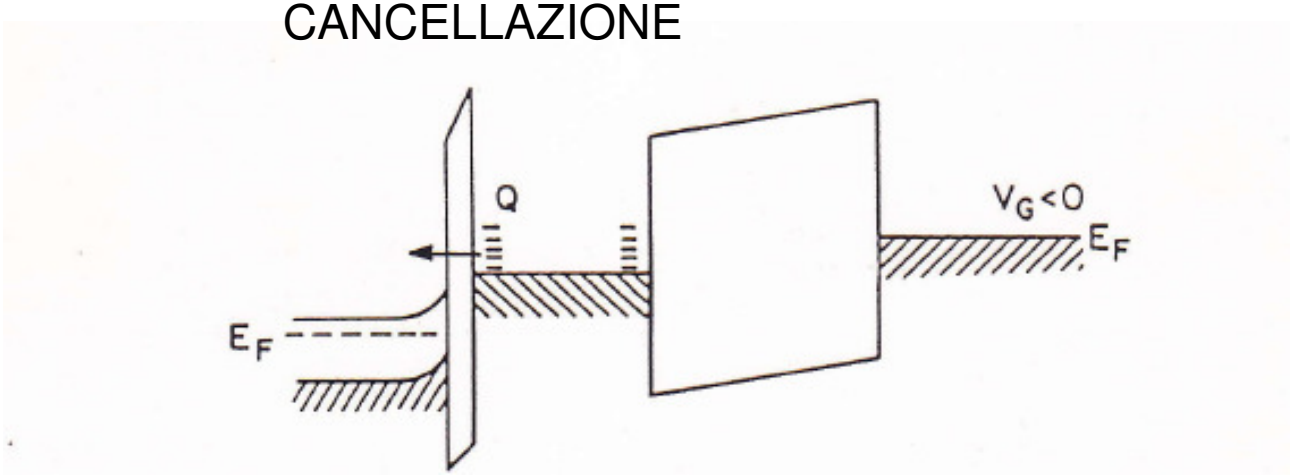
CANCELLAZIONE